LIBRARY
AUG 20 1942
PATENT OFFICE

WIRELESS ENGINEER

Editor HUGH S. POCOCK, M.I.E.E. Technical Editor Prof. G. W. O. HOWE, D.Sc., M.I.E.E.

VOL. XIX AUGUST 1942 No. 227

Editorial

Standards and Standardisation

Standard—*that which is established by competent authority as a rule or measure of quantity; a measure or weight by which others are to be regulated and adjusted; that which serves as a test or measure; that which is established as a rule or model by public opinion, custom or general consent.*

THE dictionary definition of a standard is twofold in character. It covers not only what may be termed the correct and proper standard which has been established and laid down by a competent authority, but permits also the same term to be applied to any other measure, model or rule that has been established by public opinion only, or even one that merely *serves* as a test or measure. This apparent indefiniteness of definition of what should in the ultimate be a most definite thing has often led to much confusion of thought, expression and use.

The main primary electrical standards of current, voltage and resistance have long ago been established by "competent authority." Other quantities such as inductance and capacitance have equally been defined and certain standardised relationships between them established by international agreement.

Competent authorities, however, are not all unanimous as to the exact values to be assigned to these standards, and certain corrections amounting to a small fractional percentage in value have been tentatively agreed upon, and would by now have been in force in most countries had the international scientific relations not been so interrupted by the upheavals of a war.

The term "standard" has, however, a wider application than merely to these primary standards as established and determined by our National Physical Laboratory. It is used to designate a wide variety of agreed quantities, dimensions, properties, types or even methods of test of many and various articles in accordance with the specifications laid down by the British Standards Institution, which for this purpose is a properly constituted and recognised "competent authority."

Lack of Support

It has often been said that the British nation dislikes standardisation and is reluctant to use it. This is probably less the case in the general sphere of electrical engineering than it is in some specialised branches of it —such as the radio industry, wherein for years past many valiant attempts to reach even a limited number of agreed standards have unfortunately received little or no practical support, either from the industry as a whole nor even from the firms who have supplied the technical representatives to the committees that have drawn up and agreed the "standards." Unfortunately the Radio Manufacturers' Association in this country has never been so actively supported in this respect as has their counterpart in the United

States. The latter body has been much more active in the Standards field, and even to this day some of the American R.M.A. Standards are accepted freely here, and even thought by many actually to have been issued by our own body.

It was at first thought that the restrictions of wartime conditions would favour the adoption of and adherence to standards if only on the score of saving materials by reducing the variety of types of components to be manufactured. Several War Standards were issued at first by the Association itself, and later by the British Standards Institution on its behalf. The present near-cessation of manufacture of anything in the radio field, other than for Service requirements, has, however, rendered useless some of these war standards. The only field left open, therefore, concerns the component requirements of the various Government Departments and the Services. This field is a wide one, and much useful work is now being accomplished in it, after the initial inertias have been overcome, but for obvious reasons much of it must remain unpublished during the war.

Degrees of Accuracy

The utility of any true standard as defining a determinable quantity can be assessed only in terms of the accuracy with which that quantity can be measured in practice. This degree of accuracy, however, as regards quantities used in the radio industry, is a very variable one, depending upon whether the measurement is carried out in a standardising laboratory, or, for example, in a repair workshop. Much confusion can in consequence exist as to the meaning to be applied to the term "standard." Recent letters in the correspondence columns of *Wireless Engineer* arising from Mr. Griffith's article in the March issue have emphasised this point. The standard of accuracy thought of by the practical designer or radio engineer is often of a much lower order than that demanded by the research laboratory. Nowhere is this more readily evident than in the two fundamental components of every radio circuit—capacity and inductance. A so-called "standard" condenser may in some instances have an accuracy of a mere one per cent., while in another it may be correct to within one part in ten-thousand—all depending upon the type of use to which the article is to be put or the manner in which it is to be measured. If the measuring instrument or bridge with which the component is to be tested cannot discriminate to better than one per cent. it is of little use to employ with it expensive standards adjusted to a high order of accuracy, and *vice versa*.

In some instances manufacturers of these articles have marked their wares as Grade I or Grade II standards, in some quite arbitrary manner—designations that are meaningless to the user unless some standardised nomenclature is agreed upon or defined.

Proposed "Orders of Precision"

If we accept as axiomatic that no measurement of a basic quantity is of value if it cannot be made to an accuracy of at least 1 per cent., this could be made the "zero" of accuracy. Increased precision, with the corresponding increased accuracy of standards needed, could be designated as "first order," "second order," etc., for each increase of order of magnitude. The number designating the order of precision thus becomes the logarithm of the reciprocal of the tolerance to which the component is adjusted or can be measured, thus:—

Tolerance %	Reciprocal of tolerance	Logarithm of reciprocal	Order of precision
1	1	0	0
0·1	10	1	I
0·01	100	2	II
0·001	1,000	3	III

This scheme would eliminate any uncertainty and tell the user at once what precision his standard or his measuring apparatus possesses.

Surely here is an opportunity for the British Standards Institution to issue a Standard Specification to define a Standard!

Negative and Positive Resistance*

Sources and Sinks of Power

By D. Martineau Tombs, M.Sc., A.C.G.I., D.I.C.

(Imperial College of Science and Technology, City and Guilds College, London)

SUMMARY.—The term negative resistance is defined in analogy with a positive resistance, as watts generated/(current)^2. Positive resistors are identified with sinks of power, negative resistors with sources of power. In marked contrast with a pure positive resistor, which behaves as such at all frequencies, sources in practice usually show a very marked frequency preference, behaving as negative resistors only at specified frequencies (a battery at zero frequency, an alternator at 50 c/s, etc.). The ideal negative resistor has the same negative resistance at all frequencies including D.C., and is represented on an I, V plane by a straight line of negative slope through the origin, thus occupying the 2nd and 4th quadrants; a positive resistor (or any passive circuit), occupying the 1st and 3rd.

The point resistance $R = V/I$, and the incremental resistance $r = \partial V/\partial I$ are defined, R being negative in the 2nd and 4th quadrants, r being negative in any quadrant where the slope is negative. Negative resistors (such as the dynatron) exist, that do not show a frequency preference, i.e., they will deliver power at the frequency of the exciting source. These however all have a positive slope at or near the origin. Two types therefore exist depending on whether $\partial I/\partial V$ passes through zero (voltage controlled) or infinity (current controlled) between the origin and the point of negative resistance.

For a voltage controlled negative resistor the appropriate oscillatory circuit is of the rejector type and the "best" negative resistance is a numerically small one, while for a current controlled negative resistor the appropriate oscillatory circuit is of the acceptor (series) type and the "best" negative resistance is a numerically large one.

Positive and Negative Resistance

THE resistance in ohms of a two terminal resistor (or network) is defined as the consumed power in watts divided by the square of the R.M.S. current in amperes flowing into the network; or as the square of the R.M.S. voltage across the terminals divided by the power absorbed in watts; or as the ratio of voltage to current. In symbols

$$R = W/I^2 = V^2/W = V/I$$

using the physicist's concept one may speak of a positive resistance as being a sink of power.

In like manner a negative resistance § measured in negative ohms may be defined as the generated power in watts divided by the square of the R.M.S. current in amperes flowing out of the apparatus; or as the square of the R.M.S. voltage across the terminals divided by the power generated in watts; or as the ratio of voltage to current. In symbols

$$R_n\dagger = W_g/I^2 = V^2/W_g = V/I$$

a negative resistance is identified with a source.

The resistance is an appropriate measure of the property of a resistor, whereas the negative resistance is not a particularly appropriate property of most sources of electrical power, but for certain types the concept is useful. It is the purpose of this note to answer the question "How are negative resistances related to sources of electrical power and vice versa?"

$I = f(V)$ for any Two Terminal Resistive Network

The characteristic of any two terminal resistive network, whether linear or non-

* MS. accepted by the Editor, March, 1942.

§ Yates-Fish, *Proc. Phys. Soc.*, Vol. 48, Pt. 1, January, 1936.

† The symbol R_n (or r_n later) is taken to be a positive quantity of negative ohms, or a negative quantity of ohms. Thus if the power generated is 100 watts, and the current 2 amps $R_n = 100/2^2 = 25$ negative ohms $= -25$ ohms. R_n in series with R has a resistance of $R_n + R$; in shunt $R_nR/(R_n+R)$, numerically R_n must be expressed in the same units as R, viz., ohms, so that R_n is negative, e.g., above $R_n = -25$ ohms.

linear, active or passive, may be represented as a curve defined by $I = f(V)$ on a surface (I, V), where I represents the current in amperes flowing into the network, and V the voltage applied between the terminals of the network.

Sinks have Positive Slope, Positive Resistance, and I and V in Phase

Thus in Fig. 1 curves 1, 2, 3, 4 represent the characteristics of four pure resistances of increasing value, i.e., if V is applied from an

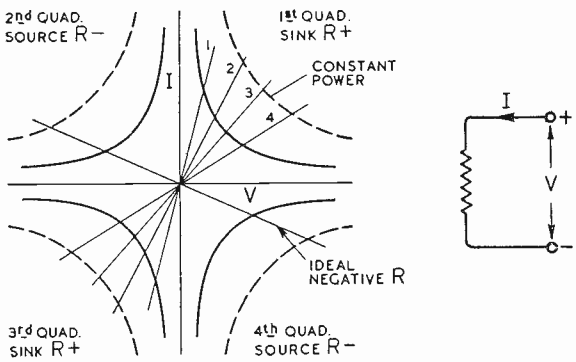

Fig. 1.

external controllable source, and the resulting current I measured in series with one of the terminals, $I = f(V)$ will give the characteristic. If R is a pure resistance this experiment may be performed at any frequency up to the point where the free space wavelength is still large compared to the physical dimensions of the apparatus. All values of resistance from zero to infinity may be plotted on this area, and all magnitudes of I and V, both positive and negative.

If $I = f(V)$ is linear then the curves are straight lines through the origin occupying the 1st and 3rd quadrants. They all possess a positive slope, i.e., an increase in V causes an increase in I at all points in both quadrants.

Power $W = IV$ in watts, is represented by the product of I and V, and appears as an area on the diagram. Lines of constant power are hyperbolae, such that $IV =$ constant.

All passive circuits will have a characteristic lying in the 1st and 3rd quadrants, since they are necessarily sinks of power, while any characteristic occupying any part of the 2nd and 4th quadrant must necessarily be an active circuit, containing a source of power.

Sources have Negative Slope, Negative Resistance, and I and V in Antiphase

If a battery is connected directly across a resistor the current is the same in each part of the circuit. It flows through the resistor from the positive to the negative terminal of the battery, dissipating power in the resistor, while within the battery it flows from the negative to the positive terminal and generates power. In the first case we associate current and voltage in phase with a positive resistance and power dissipation; in the second case, current and voltage in opposition with a negative resistance and power generation. This concept holds for A.C. as well as D.C. Power $= IV \cos \phi$, where ϕ is the phase between current and voltage. This power is positive if ϕ lies between $-\frac{\pi}{2}$ and $+\frac{\pi}{2}$ while it is negative if it lies between $\frac{\pi}{2}$ and $-\frac{\pi}{2}$. The particular cases in D.C. are where $\phi = 0$ a sink, and $\phi = \pi$ a source.

Idealised Negative Resistance

We idealise the property of a negative resistor thus—A pure negative resistor is a two terminal device which on the application of a positive increment of voltage at its terminals results in a negative increment of current. In analogy with a pure positive resistor we state that the negative resistor shall behave as such at all frequencies. This is an important stipulation, since most sources of electrical energy are not independent of frequency. A battery, for instance, can deliver energy only at zero frequency, and an alternator at a frequency determined by its speed, etc. Thus there are few types of pure negative resistance in practice.

A pure *linear* negative resistor (Fig. 1) would have $I = f(V)$, a straight line of negative slope, passing through the origin.

Such a relationship implies the delivery of energy from the device to the circuit attached to its terminals. Thus points lying within the 2nd and 4th quadrants represent sources of power. This however does not mean that all sources of power are

confined to the 2nd and 4th quadrants, nor all sinks to the 1st and 3rd.

Definition of Point Resistance R and Incremental Resistance r

$I = f(V)$ is in general non-linear, or if linear may not pass through the origin.

The point resistance R is defined as the ratio of V/I for the point. R may be positive if within the 1st and 3rd quadrants or negative (R_n) if within the 2nd and 4th, corresponding to the absorption of power by the network, or the delivery of power from the network.

The incremental or slope resistance r is defined as $\partial V/\partial I$ at any point on the curve. r may be positive or negative (r_n). If positive it represents an absorption of power to fluctuations about the static or bias point, if negative the delivery of power. A point with a value r or r_n may be in any quadrant, not necessarily in the 1st and 3rd for the absorption of power, nor in the 2nd and 4th for the delivery of power. There is no necessary connection between the signs of R and r.

Example 1. *Battery in series with Resistor.*

As an example take the $I = f(V)$ relationship of a battery in series with a resistor (Fig. 2).

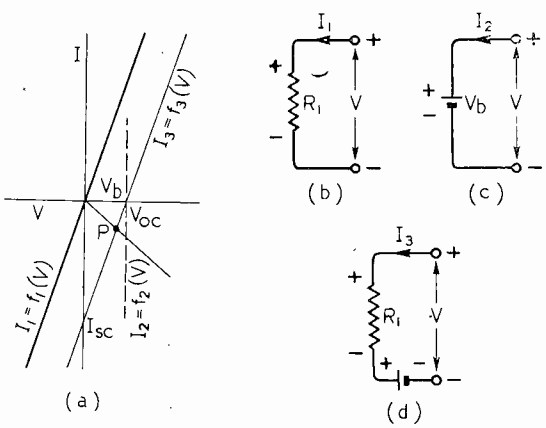

Fig. 2.

$I_1 = f_1(V)$ represents the relation for a pure linear resistor. It occupies the 1st and 3rd quadrants and is therefore a sink of power at all values of current and voltage and any frequency.

$I_2 = f_2(V)$ is a like curve for a perfect resistanceless battery. It occupies the 1st and 4th quadrants depending on whether $V > V_b$ or $V < V_b$. In the 1st quadrant it is being charged, in the 4th discharged. If now the resistance R_1 is placed in series with battery V_b, and an exploring controllable voltage V applied to the pair, the curve $I_3 = f_3(V)$ passes through the 4th quadrant for a certain range, and the two terminal device is therefore a source of power over this range, viz. between the open circuit voltage V_{oc} and the short circuit current I_{sc}. Beyond these points, in one case $V > V_b$ the battery is being charged, in the other the I.R. drop in the resistor is greater than the battery voltage. It should be remembered that V is an externally controllable applied voltage and I the resulting current.

Now $R = V/I$. At point P (Fig. 2) this ratio is negative since I is below the origin. Power is being fed out from the two terminals at the rate of IV watts.

The incremental resistance $r = \partial V/\partial I$ is positive, however. Thus if arrangements are made for a D.C. voltage V to be applied such that I flows, the net result is a negative resistance $R_n = V/I$, but the resistance presented to fluctuations about this point will still be positive, power being absorbed at all frequencies except zero.

One may imagine this experiment being performed by the use of an ideal transformer which isolates the D.C. and A.C. components. The load as seen from the A.C. generator is determined by r and not at all by R, whereas the battery feeds into a resistance R, and behaves as a negative resistance R_n numerically equal to R.

Example 2. *Diode Characteristic.*

An interesting example of the point resistance R_n being negative and the incremental resistance r positive, is found in a normal diode characteristic in which the anode current does not fall quite to zero at zero anode voltage.

Referring to Fig. 3 the points on the curve between A and B occupy a part of the 2nd quadrant and show a negative point resistance R_n and represent a source of electric power. The energy comes from the heated cathode due to some charges emerging through the work-function barrier with

sufficient energy to climb the space-charge hill and proceed to the plate at zero potential. This is a very direct way of converting heat energy into electrical energy and is in marked contrast with the roundabout method of boiling water with the coal, rotating a turbine with the steam, driving a generator with the turbine and getting electricity as an end product. The slope resistance r is positive, however, showing that at all frequencies other than its natural frequency (zero) the diode is a sink of power.

The foregoing may be summarised thus :—

Point sinks (R) lie in 1st and 3rd quadrants.

Point sources (R_n) lie in 2nd and 4th quadrants.

Incremental sinks (r) lie in any quadrant, but have positive slope.

Incremental sources (r_n) lie in any quadrant, but have negative slope.

Frequency Characteristic of Negative Resistors

An idealised negative resistor has a straight line of negative slope passing through the origin, and represents a source of power at any frequency. By this is meant that if a two-terminal source of power is investigated by the application of an alternating voltage of variable frequency, the power delivered to the exploring circuit will be independent of the frequency. This concept is difficult to grasp since nearly all sources of electrical power in common usage have a marked frequency characteristic. Nevertheless the dynatron* oscillator, more nearly approaches the ideal negative resistance since it will deliver power to a tuned circuit *at the frequency of the tuned circuit.* The action is best imagined by assuming the tuned circuit to be shock excited momentarily and then connected across the negative resistance. The voltage across the tuned circuit due to its shock is the exploring voltage V mentioned above. If this voltage causes the negative resistance to deliver up sufficient energy to the tuned circuit oscillations will be maintained.

* The term is used to denote the characteristic of a valve in which secondary emission produces a negative differential resistance. It is also applied to any valve having a static characteristic with a negative slope, e.g., split-anode magnetron.

An Alternator

Consider a source (say an alternator) of e.m.f. E (Fig. 4) in series with a resistor R. Let V be an exploring voltage, controllable in frequency and magnitude.

Assuming that the signs are as marked in Fig. 4,

$$V = IR + E$$

$$\therefore \quad I = \frac{V - E}{R}$$

Power delivered from right to left

$$W = IV = V\frac{V - E}{R}$$

Let $V = \hat{V} \sin \omega t$ the controlled source

$E = \hat{E} \sin \omega_1 t$ the source within the network of fixed frequency.

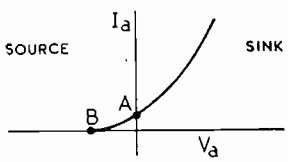

Fig. 3.

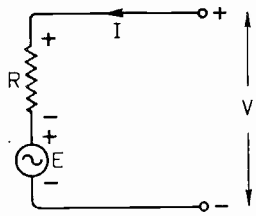

Fig. 4.

We seek the conditions under which the network may deliver power (from left to right) and therefore act as a negative resistor. This will occur under conditions that make W negative.

$$W = IV = \frac{\hat{V}^2 \sin^2 \omega t - \hat{V}\hat{E} \sin \omega t \sin \omega_1 t}{R}$$

$$= \frac{\hat{V}^2}{2R}\left[1 - \cos 2\omega t\right] - \frac{\hat{V}\hat{E}}{2R}\left[\cos(\omega - \omega_1)t - \cos(\omega + \omega_1)t\right]$$

$$= \frac{V^2}{R}\left[1 - \cos 2\omega t\right] - \frac{VE}{R}\left[\cos(\omega - \omega_1)t - \cos(\omega + \omega_1)t\right]$$

where V and E are R.M.S. values.

Now if $\omega = \omega_1$ the average value of the cosine terms is zero, and average power $\overline{W} = \frac{V^2}{R}$ independent of E. This shows that if the frequencies are different the network is a sink of power for all voltages applied to it.

If however $\omega = \omega_1$

$$\overline{W} = \frac{V^2}{R} - \frac{VE}{R} = \frac{V}{R}\left[V - E\right]$$

This can be zero if $V = E$. This means that V and E are in antiphase (see sign convention on Fig. 4), and of equal magnitude. If V is positive $\overline{W}$ may be negative, as V is less than E.

Thus for the alternator the diagram, Fig. 2a, will serve in which $I_3 = f_3(V)$ now represents the characteristic under the special restriction that $\omega = \omega_1$. E, V and I are now R.M.S. values. The curve occupies the 4th quadrant between the open circuit voltage V_{oc} and the short circuit current I_{sc}, and is a source of power over this range, beyond which it is a sink of power.

The point resistance R now applies to the ratio of V_{RMS}/I_{RMS} and is equal to $R/(1 - E/V)$. This is negative if E/V is greater than unity, and E and V in antiphase according to the conventions in the diagram.

If $\omega \neq \omega_1$ $I_1 = f_1(V)$ applies. This curve occupies the 1st and 3rd quadrants and is a sink of power for all voltages.

If the phase angle between V and I is not 0 or 180 deg. as has heretofore been assumed, but lies between these values, power is periodically exchanged between V and E. If the angle is 90 deg. (corresponding to a reactive load) the alternator is periodically a negative and positive resistance, delivering and absorbing power, the average value of which is zero. The alternator, however, must be capable of delivering the power, even though the mean power delivered may be zero.

Similarly, if ω is nearly equal to ω_1 there is an exchange of energies between the two at a beat $(\omega - \omega_1)$ frequency, the mean power being zero over the beat cycle. Thus the alternator behaves as a time varying negative resistor, with a definite R.M.S. value for a given load.

Valve Amplifier

A further example illustrating the frequency characteristic of physical negative resistors may be found in any valve amplifier.

Referring to Fig. 5 we examine the circuit to the left of AB with a search voltage of controllable magnitude and frequency and we find that power is delivered over a limited range of voltage only when the frequency coincides with the grid drive frequency. This case then is identical with that of the alternator. However, if it is possible to apply a small fraction of the *search* voltage to the grid in suitable phase, then it is found that the circuit will deliver power, and act as a negative resistor at the frequency of the exploring voltage. Again if a tuned circuit is shock excited and attached to the negative resistor (with a 3rd contact to apply the synchronising voltage to the grid) the damping of the circuit will be reduced. If the negative resistance in shunt across the circuit is sufficient to neutralise the positive resistance, oscillation will persist. The amplifier becomes an oscillator.

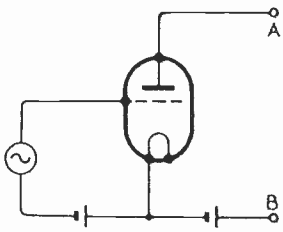

Fig. 5.

Apart from the disadvantage of the need for a 3rd contact the characteristic of a valve operated in this way approaches most nearly the ideal negative resistor, though with definite limitations as to voltage swing that can be obtained.

The need for a 3rd contact can be overcome by the use of a more complex circuit.*

The foregoing explains in terms of the defined concepts the reason why, for instance, a battery which is a source of power will not of itself maintain oscillations in a tuned circuit, also why a 50 c/s supply will only maintain oscillations in a tuned circuit tuned to 50 c/s.

Physical Negative Resistances exist only over Limited Range. Therefore Voltage- and Current-controlled Types

No sources of infinite power exist, therefore the negative slope cannot exist over an unlimited range. The negative slope may change to a positive one either by passing through zero or infinity. If $\partial I/\partial V$ goes through zero this is termed a voltage controlled device (Fig. 6a), since at any value of V, I is single valued. Similarly if $\partial I/\partial V$ goes through ∞ this type is known as a current-controlled device (Fig. 6b).

* Yates-Fish, *Proc. Phys. Soc.*, Vol. 48, Pt. 1, January, 1936.

Passive circuits showing a negative slope resistance (such as a neon lamp) necessarily have a positive slope at the origin and for operation in the r_n region must be biased to the appropriate point.

Appropriate Circuits for Current- and Voltage-controlled Negative Resistors

The appropriate oscillatory circuits used with each are indicated in Fig. 6. A shock excited oscillation between A and B, Fig. 6a, will apply a voltage fluctuation across the terminals of the negative resistor. This will cause it to deliver power to the circuit that caused the disturbance. This will mean that the damping of the attached circuit will have become less by virtue of the presence of the negative resistance r_n in shunt with it.

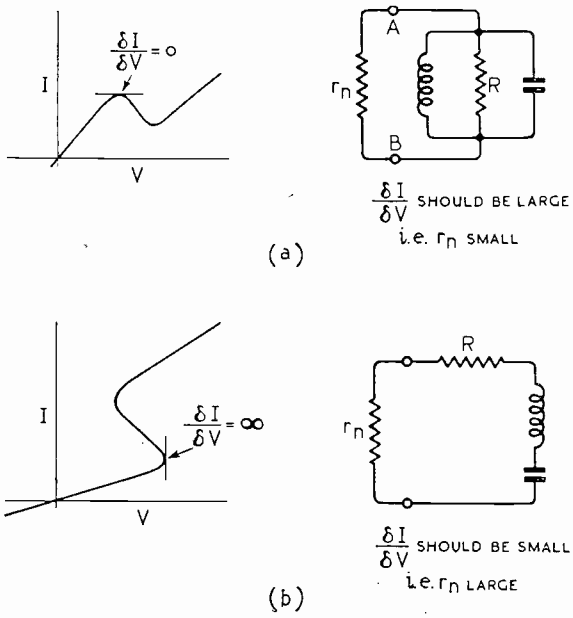

Fig. 6.

The voltage across both the negative resistance and the load is the same. The power developed is V^2/r_n watts (greater if r_n is less) and the power absorbed is V^2/R watts. These must be equal when steady oscillation occurs. In fact oscillation will build up until such a balance between the power developed and absorbed is established, the amplitude of V going beyond the points where $\partial I/\partial V = 0$ if $r_n << R$.*

* Brunetti, *Proc. I.R.E.*, December, 1937.

The total resistance across the tuned circuit for 6a is $Rr_n/(r_n + R) = R/(1 + \frac{R}{r_n})$. Thus if $r_n = -R$ the shunt resistance is ∞ and the circuit resistance is zero. An oscillation once started will persist. If r_n is less than R in magnitude the oscillation will grow.

Similarly with the current controlled device (Fig. 6b) the appropriate circuit is that which produces a large current at resonance. The current is the same in both branches I^2r_n watts being generated (greater if r_n is greater) I^2R watts being absorbed. If $r_n > R$ an oscillation once started will grow.

Hence the best voltage-controlled negative slope-resistance is one in which r_n is small, while the best current-controlled negative slope-resistance has r_n large.

Acknowledgment

I am glad to acknowledge the assistance rendered by Mr. G. King and Mr. D. D. Vonberg in criticising the manuscript.

New Chairman for B.R.V.M.A.

THE Board of Management of the British Radio Valve Manufacturers' Association has elected J. W. Ridgeway to be chairman of the Association. Mr. Ridgeway, who is manager of the radio division of the Edison Swan Electric Co., will retain the chairmanship of the B.R.V.M.A. Committee on Production, an office which he has held since its creation.

R.S.A. Prize for Invention

A PRIZE of £50 for an invention is again being offered this year by the Council of the Royal Society of Arts under the Thomas Gray Memorial Trust, the objects of which are the advancement of the science of navigation and the scientific and educational interests of the British Mercantile Marine. The prize will be awarded to any person of British or Allied nationality who may bring to the notice of the Council an invention, publication, diagram, etc., which in the opinion of the judges is considered to be an advancement in the science or practice of navigation, proposed or invented by himself in the period 1st January, 1937, to 31st December, 1942. Competitors must forward their proofs of claim between 1st October and 31st December this year to the Acting Secretary, R.S.A., John Adam Street, Adelphi, London, W.C.2.

A Sensitive Valve Voltmeter Relay*

By S. S. Orlov and A. A. Pirogov

IN 1936 the authors set themselves to develop a voltage regulating device which would satisfy the following requirements: reliability, simplicity and stability of regulation, possibility of varying easily and quickly the value of regulated voltage and finally a high sensitivity which would ensure voltage stability (at least better than 1 %) and yet not require any maintenance servicing or additional adjustments. By 1937 a laboratory model was produced fully satisfying the above conditions and in 1938 commercial production of the valve relay was started.

A factory produced valve relay has been in operation for six months at a radio station. The voltage stability of this system has proved to be better than 0·5 %, and the limitation was imposed not by the valve relay itself but by the regulating mechanism. The sensitivity of the relay itself was of the order of 0.35–0·4 %. During the whole period (over 4,000 hours) no inspection or adjustment of the system was required with the exception of one valve which had to be replaced.

Five to seven leads are required for connecting the relay, depending on the type of the regulating mechanism (servo-motor).

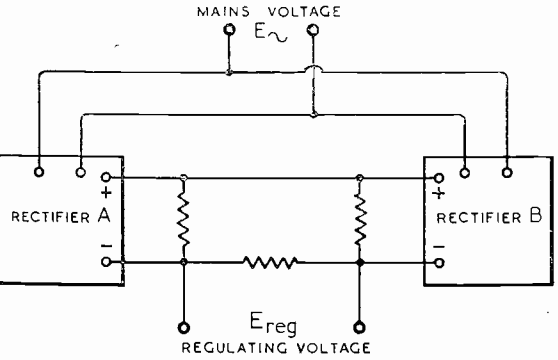

Fig. 1

The block-schematic of the valve relay is shown in Fig. 1. Two rectifiers are used having different slopes of the rectified voltage characteristics. The rectifiers are connected in opposition and the voltage difference so obtained controls the servo-motor.

The two characteristics are shown on Fig. 2. It can be seen that if the alternating voltage changes from $E_{\sim 0}$ to $E_{\sim 1}$, a regulating voltage $E_{reg}=ab=\Delta E_{\sim}$ $(\tan\alpha-\tan\beta)$ will be obtained.

It is desirable to increase the slope of characteristic A and decrease the slope of

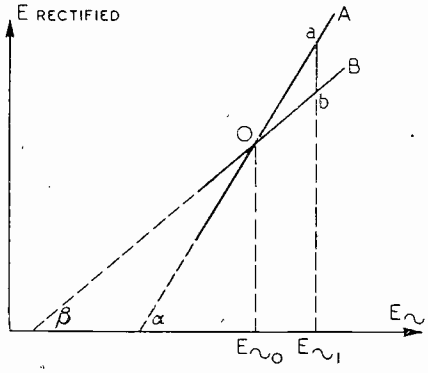

Fig. 2

characteristic B. Experience has shown that this can be best achieved by using a tungsten filament valve for rectifier A and a valve with activated filament for rectifier B. Valve A should be operated so that the rectified voltage will be determined in the main by the filament saturation current. Valve B, on the other hand, should have a large reserve of electron emission so as to ensure space-charge limited operation.

A full schematic of the system is shown in Fig. 3. No special requirements are imposed on the supply transformers.

A differential blocking relay (25) is used to prevent false operation in the case of a fault in the system. This relay operates and switches off the system if the balance of currents in its windings is upset.

E_{reg} obtained across the loading resistances (12), is of the order of 20 V per 1 % of change in the supply voltage. A single stage push-pull amplifier (32) supplied from windings IV and VI of transformer TP_2, is used to amplify this voltage and to

* Abbreviated translation from the Russian article which appeared in *Elektrosvyaz*, 1941, No. 4, pp. 16–22.

ensure reliable operation of the two relays controlling the contactors of the servo-

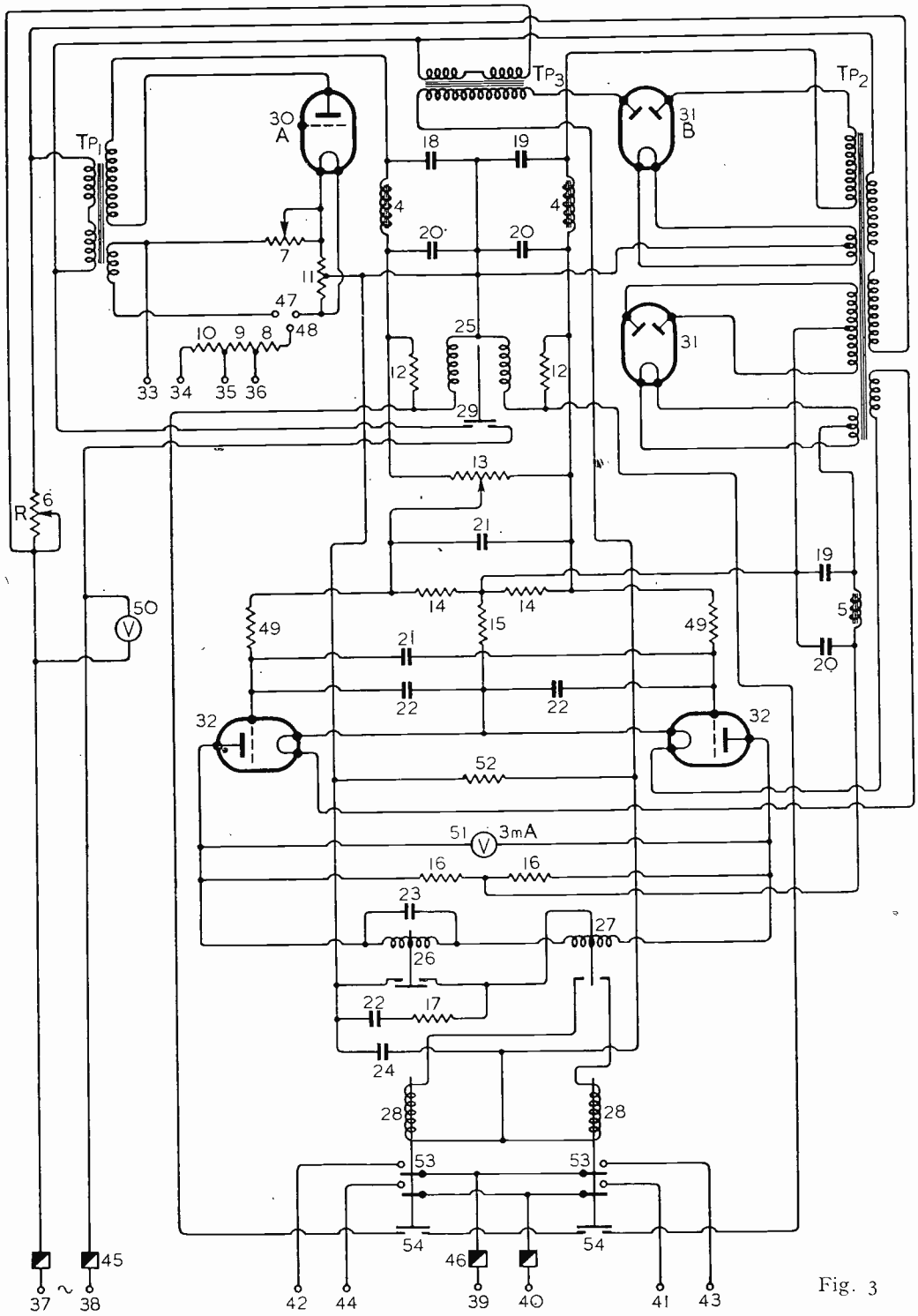

Fig. 3

motor. These relays (26 and 27) are of the telephone and telegraph types respectively.

A potentiometer (13) is connected in the grid circuit of the amplifier for varying within very wide limits the sensitivity of the system.

A separate transformer TP_3 is used for operating the servo-motor contactors to avoid a possible unstabilising effect.

The servo-motor contactors (28) are provided with "break" blocking contacts (54) which connect in parallel both windings of the differential blocking relay (25) and prevent its operation while the contactors are unoperated. This precaution is necessary when the system is first switched on since, owing to a possible difference in the thermal inertia of the two rectifiers, currents of different values may start to flow through the differential relay and cause it to operate.

During the initial adjustment of the valve relay the rectifiers *A* and *B* are balanced at a voltage somewhat lower than the voltage to be stabilised, e.g., 190 V in the case of 220-volt mains and 100 V in the case of 120-volt mains. The difference between the voltage at which the rectifiers are balanced and the voltage to be stabilised is taken up by rheostat *R* (6).

By adjusting rheostat *R* the value of the voltage to be stabilised can be varied almost instantaneously.

The valve relay can also be used for stabilising D.C. In this case the filament current of rectifier *A* is taken from the supply to be stabilised and the system is provided with the necessary resistances (8, 9 and 10) for operating from supply voltages of from 12–15, 18–22 and 32–38. For the remaining circuits a supply of 100 watts at 110/220 volts A.C. is required. The voltage variation up to ± 10 % of this additional supply is permissible.

The contactors of the servo-motor have two "make" contacts (53) and one "break" contact (54). The "make" contacts must be capable of switching off currents up to 2A at 220 volts D.C., while the blocking contact is normally without current and voltage and only in the case of a fault switches off 20–30 mA at 100–200 V.

The magnetic circuit of the contactor should consume very little power, if possible not more than 30 mA at 60–80 V.

The differential blocking relay (25) is an ordinary telephone relay the winding of which is replaced by two separate windings connected in opposition so that their magnetic fields are subtracted. The relay has a "break" contact (29) made of tungsten for greater reliability in operation.

Rheostat *R* (6) must have a low temperature coefficient so as to prevent changes in its resistance when it is warmed up.

Telephone relay (26) must operate at 5 mA and a high resistance winding (up to 2,000 ohms) must therefore be used. The polarised telegraph relay (27) must operate at 3 mA. To obtain this sensitivity the windings of the relay should consist of 3,000 turns each (0.05 mm. dia. wire). These relays are provided with a spark quenching device (22, 17, 24).

A centre zero voltmeter (51) 150–0–150 V calibrated in percentage deviation from the nominal value is used. The resistance of this voltmeter should be of the order of 70,000–80,000 ohms. The scale of this somewhat unusual instrument has a range from − 2.5 to + 2.5 % approximately, and gives a very accurate indication of the mains instability.

Adjustments are made in the following order. Firstly, the balanced voltage of the rectifiers is adjusted at the primaries of the transformers with the aid of rheostat *R* (6) and a portable voltmeter. As mentioned above the balanced voltage should be somewhat lower than the one to be stabilised.

Secondly, the rectified voltages of valves *A* and *B* are made equal by adjusting the semi-variable rheostat (7) in the filament circuit of valve (30). The right condition is checked by means of a 250-volt D.C. voltmeter connected in parallel to a carbon potential divider (13) at the input of the amplifier.

In practice it is difficult to obtain complete equality of the voltages and this may be considered as achieved as soon as the pointer of the voltmeter approaches O. After this the voltmeter is disconnected and the operation of the amplifier checked. For this purpose the carbon potential divider (13) is short circuited. The 150–0–150 voltmeter (51) is connected in parallel with the amplifier load and under normal conditions the voltage applied to this voltmeter should not exceed 20–30. If this is not the case the loading resistances (16) should be checked and also the characteristics of the amplifier valves.

The differential blocking relay (25) is then adjusted. It should reliably operate when the difference of currents in the windings exceeds 7 mA. This is achieved by adjusting the air gap in the magnetic circuit and the springs of the armature.

As soon as the voltages of rectifiers *A* and *B* are balanced, the preliminary relays will start operating because variations in the

main voltage are always greater than the sensitivity of the system. In order to achieve maximum reliability of operation, these relays must satisfy the following conditions :

1. The air-gaps in the relays should not be made smaller than those specified for the particular type of relay.

2. The telegraph relay must be more sensitive than the telephone relay, i.e., it must operate before the telephone relay.

3. The operating current of the telephone relay should differ as little as possible from the release current.

4. The telephone relay should operate without chattering. If necessary a 2–4 μF condenser should be connected in parallel with the relay winding.

5. There should not be any sparking at the relay contacts.

In no circumstances should attempts be made to increase the sensitivity of the valve relay by reducing the gaps or loosening the springs of the preliminary relays. The whole system is so sensitive that the main requirement imposed on these relays is reliability in operation.

With regard to the servo-motor contactors, the magnetic gap and the contacts should be so adjusted as to ensure their reliable operation and release.

A correctly adjusted valve relay has a sensitivity of the order of 0.3–0.35 %, and should not require any maintenance whatsoever during a long period of time.

Iron-Cored D.F. Loop

ONE of the most interesting and unconventional features of the wireless apparatus installed in German aircraft, details of which have been supplied by the Ministry of Aircraft Production, is an iron-cored direction-finding loop.

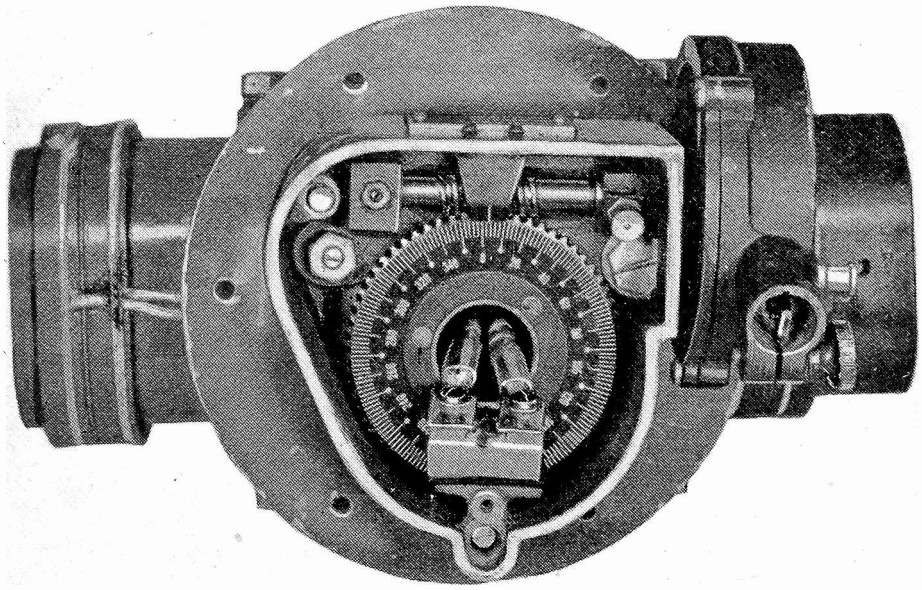

The underside of the iron-cored loop showing the gear box and worm drive for the flexible cable drive which is coupled to a handle on the compass repeater.

The 13in. aerial-coil former, which is oval in section measuring 3in. by 4in., is made of bakelised fabric ¼in. thick. Litz wire, approximately 0.08in. diameter, is used for the windings which consist of eight turns wound symmetrically on each end of the former and connected in parallel to give a 3.2 μH inductance. The iron-dust core, which has a permeability of the order of 60, is built up of ring sections placed coaxially inside the former.

Measured against an air-cored loop, the turns of which had been adjusted to give an inductance equal to that of the iron-cored loop, the latter gave an increase of 10 db over its air-cored equivalent.

Mounted on the outside of the aeroplane the loop is covered by a streamlined housing of Perspex. Connection to the DF receiver, which is actually 3 lb. lighter than the aerial, is made through a screened twin cable with a characteristic impedance of about 30 ohms.

Radiation Energy and Earth Absorption for Dipole Antennae*

By A. Sommerfeld and F. Renner

1. Introduction and Summary

THE source of radiation is assumed to be a Hertzian dipole vibrating sinusoidally in a vertical or horizontal axial direction. The surface of the earth is assumed to be plane. The quality of the earth is assumed to be characterised by arbitrary, but fixed constants ϵ and σ. (μ is assumed to be 1). By using, as Hertz did, Gaussian units (not rational units), we represent the wave constants in the medium I (air), and II (earth) by:

$$k_1 = \frac{\omega}{c}, \; k_2^2 = \frac{\epsilon\omega^2 + 4\pi i\sigma\omega}{c^2} \quad .. \quad (1)$$

The distance of the dipole from the surface of the earth is indicated by h. We shall determine the dependence of the radiated energy and the like upon h and the part thereof which is absorbed by the earth, by comparatively simple formulae and illustrate them by diagrams.

The general and exact formulae for the field are known. In the case of the horizontal dipole, they were given by Hörschelmann[1]. The field of the vertical dipole has often been discussed in order to eliminate the Bessel functions appearing in the exact formulae or to approximate them by elementary functions. For our purpose, however, the exact formulae are suitable.

We are concerned with the integration of the energy flow through a surface or a couple of surfaces surrounding the dipole. If the earth is assumed to be a perfect conductor the obvious surfaces to take are an infinitely distant concentric sphere together with the reflecting surface of the earth (Abraham, 1899). If, however, this assumption is not made, this procedure is disadvantageous, since it leads to complicated formulae. It is better and more suited to the symmetry of the problem to use a pair of parallel planes, one above and the other below the dipole, when computing its total radiation (see Fig. 1). For computing the absorption of the earth the lower of the two planes is used. Since the flow of energy is given by the product of two components of the field each of which comprises a Bessel function $J_m(\lambda r)$ or $J_m(lr)$, (λ and l being integration variables to be defined later), integrals like

$$I = \int_0^\infty J_m(\lambda r) J_m(lr) r dr \quad .. \quad .. \quad (2)$$

play an essential part throughout this paper. Indeed, we shall show that the somewhat more complicated integrals appearing in connection with the horizontal dipole can be reduced to formula (2). In connection with the vertical dipole, integral (2) appears directly with $m = 1$. It is then simply:

$$I = \begin{cases} 0 \; . \; . \; . \; l \neq \lambda \\ \infty \; . \; . \; . \; l = \lambda \end{cases} \quad .. \quad .. \quad (3)$$

so that with finite or infinitely small η:

$$\int_{\lambda-\eta}^{\lambda+\eta} I dl = 1 \quad .. \quad .. \quad .. \quad (3a)$$

I has thus the character of a "δ-function."

By means of equations (3) and (3a) the integration of the energy flow may be effected along the planes $z = h \pm \epsilon$. In doing this, the Bessel functions are eliminated from all formulae, and the original triple integrals in r, l and λ are reduced to simple integrals.

We call I the orthogonal integral of the Bessel function. As usual this permits the development of arbitrary functions[2]. Moreover, the condition $I = \sigma$ may be obtained from the condition of orthogonality of the spherical functions.

---

* Translated by Dr. Walther Wolff from article in *Annalen der Physik*, Vol. 41, No. 1 (1942), pp.1–36.

[1] H. von Hörschelmann, Munich thesis, 1911; *Jahrb.d. drahtl. Telegraphie u. Telephonie*, Vol. 5, p. 14, 1911.

[2] See, for example, Frank-Mises, 2 Edition, 1935, p. 921, cited in the following Fr.-M.

$$\int_{-1}^{+1} P_n^m(x) P_{n_1}^m(x) dx = \sigma \quad . \quad . \quad . \quad n \neq n'$$

by a known limiting process corresponding in our problem exactly to the substitution of a plane earth for the spherical earth. It was this limiting process which suggested to us the integration over the planes of Fig. 1.

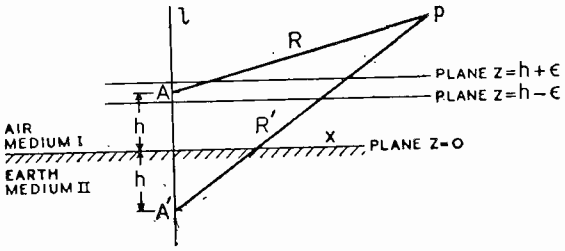

Fig. 1. *The origin of the rectangular xyz-system is assumed to lie vertically below the antenna A. In the case of the horizontal dipole the x-axis lies in the axial direction of the horizontal dipole. We also use cylinder co-ordinates r, ϕ, z. The angle ϕ is measured from the x-axis. R is the distance between the variable point P and the antenna.* $R = \sqrt{r^2 + (z-h)^2}$. *In the figure the image A' of the antenna A is also indicated. The distance of the variable point therefrom is* $R' = \sqrt{r^2 + (z+h)^2}$.

The same integration method has previously been used by K. F. Niessen[3]. We shall revert to some objections[4] to his results in sections 4 and 5. We believe that our treatment is simpler and more complete than that of Niessen.

In section 3 we shall apply our integration method to the total radiation S of the vertical or horizontal dipole. If S_+ indicates the total energy flow through the plane $z = h + \epsilon$ in the positive z direction, S_- that through the plane $z = h - \epsilon$ also in the *positive* z direction then S is given by :—

$$S = S_+ - S_-$$

First we have to develop the general field formulae for both cases in section 2, since these are often given in the literature[5] only for the limiting case $h = \sigma$, for which case our method of integration does not hold good. For the *vertical* dipole the field is derived from a Hertzian function $\Pi = \Pi_z$, for the horizontal dipole (direction of x-axis) it is known that a Hertzian *vector*

$$\vec{\Pi} = (\Pi_{x1} 0_1 \Pi_3)$$

can be used. In the case of spherical problems of general character there appear correspondingly two partial fields and two potentials[6].

In section 4 the computation of the radiation S is completed. Besides the term of zero order in $k_1/|k_2|$, which was already split up in section 3, and which indicates the radiation in the case of the earth being a perfect conductor, the correction member of first order is derived which represents sufficiently exactly the conditions, for example for sea water and short wavelengths of, say, $\lambda = 40$m. In appendix 6 the closer approximation will be briefly discussed as well.

Section 5 deals with the question of absorption by the earth which we represent by $S_{abs.}$ This is computed as radiation through the lower plane $z = h - \epsilon$ of the couple of planes illustrated in Fig. 1 in the direction of the negative z-axis. According to the definitions chosen with regard to $S_\pm$:

$$S_{abs.} = - S_- .$$

Since the perfectly conducting earth is a perfect reflector, $S_{abs.}$ becomes zero if $k_2 \to \infty$. The main member of $S_{abs.}$ is thus of the order $k_1/|k_2|$. Supplements for computing this term and terms of higher orders are given in appendix 6.

In section 6 the results obtained for the vertical and horizontal dipoles are discussed, compared and graphically illustrated.

The last paragraph is concerned with the question : How is our dipole to be chosen in order to adapt it to an antenna of predetermined length and current intensity for a given current distribution ? In this paragraph also a new formula is developed for the so-called radiation resistance which supplements previously found formulae with regard to the characteristics of the earth and the position of the antenna.

2. General Formulae for representing the field of a Dipole Antenna.

If the time factor which we assume to be of the form exp. $(-i\omega t)$ is suppressed, we

[3] K. F. Niessen, *Ann. der Phys.*, Series 5, Vol. 22, p. 162, 1935 ; Vol. 24, p. 31, 1935 ; Vol. 32, p. 444, 1938.

[4] By correspondence with Mr. Niessen a complete agreement of our mutual views has resulted.

[5] For example, Fr.-M, Ch. XXIII, sections 1 and 2.

[6] Fr.-M, Ch. XX, p. 873.

have for the medium I (air) :—

$$\left.\begin{aligned} &\Delta\vec{\Pi}+k_1^2\vec{\Pi}=\sigma \\ &\underline{E}=k_1^2\vec{\Pi}+\text{grad div }\vec{\Pi}, H=ik_1\text{ rot }\vec{\Pi} \end{aligned}\right\} \quad \ldots \quad (4)$$

For the *vertical dipole* [7]—

$$\vec{\Pi}=\Pi_z,\ \underline{E}=(E_r, E_z),\ \underline{H}=H_\phi.$$

Thus in view of (4), if we always write down only those components which we actually need[7] :—

$$E_r=\frac{\partial^2\Pi_z}{\partial r\partial z},\ H_\phi=ik_1\frac{\partial\Pi_z}{\partial r} \quad \ldots \quad (5)$$

In order to find Π_z we start from the primary excitation :—

$$\Pi_{\text{prim}}=A\frac{e^{ik_1R}}{R} \quad \ldots \quad (6)$$

and remarks that

$$\left.\begin{aligned} &J_0(\lambda r)e^{-\mu_1 z},\quad \mu_1=\sqrt{\lambda^2-k_1^2} \\ &J_0(\lambda r)e^{+\mu_2 z},\quad \mu_2=\sqrt{\lambda^2-k_2^2} \end{aligned}\right\} \quad \ldots \quad (7)$$

are particular solutions of (4) with regard to I or II, which are in accordance with the symmetry of our problem and the condition that they should become zero for $z=\pm\infty$. By multiplying each with a freely chosen function $f(\lambda)$ and integrating with regard to λ from 0 to ∞ a equation is obtained for the secondary excitation which is sufficiently general to comply with the limiting conditions for $z=0$ (continuity of E_r and H_ϕ when passing to the medium II. For medium I,

$$\left.\begin{aligned} \frac{\Pi_z}{A}=&\int_0^\infty J(\lambda r)e^{\mp\mu_1(z-h)}\frac{\lambda d\lambda}{\mu_1} \\ &-\int_0^\infty J(\lambda r)e^{-\mu_1(z+h)}\frac{M}{N}\frac{\lambda d\lambda}{\mu_1} \end{aligned}\right\} \quad \ldots \quad (8)$$

with

$$N=k_1^2\mu_2+k_2^2\mu_1,\ M=k_1^2\mu_2-k_2^2\mu_1 \quad \ldots \quad (8a)$$

Here and in the following, J without an index indicates the Bessel function of zero order. In (8) the upper sign is to be taken for $z>h$, the lower sign for $0<z<h$. It should be noticed that, for $z\simeq h$ both expressions of (8) become identical as they must.

In (8) the first term of the right-hand side is identical with the primary excitation (6). The second term changes for $k_2\to\infty$ into the reflected excitation (see Fig. 1.)

$$\frac{e^{ik_1R'}}{R'}$$

From (5) and (8) we obtain integral expressions for E_r and H_ϕ. We write these down for the two planes $z=h\pm\epsilon$ as follows :—

$$\left.\begin{aligned} \frac{E_r}{A}&=\int_0^\infty J'(\lambda r)f_1(\lambda)\lambda^2 d\lambda \\ \frac{i}{k_1}\frac{H_\phi}{A}&=\int_0^\infty J'(\lambda r)f_2(\lambda)\lambda^2 d\lambda \end{aligned}\right\} \quad \ldots \quad (9)$$

In these equations,

$$\left.\begin{aligned} f_1(\lambda)&=\mp e^{-\epsilon\mu_1}+e^{-2h\mu_1}\frac{M}{N} \\ f_2(\lambda)&=-\frac{1}{\mu_1}\left(e^{-\epsilon\mu_1}-e^{-2h\mu_1}\frac{M}{N}\right) \end{aligned}\right\} \quad \ldots \quad (9a)$$

In the second terms of the right-hand side of (9a) the exponent was originally $-\mu_1(2h\pm\epsilon)$. However, ϵ can be neglected compared with $2h$ and it has to be retained only where it appears alone, that is to say in the first terms of the right-hand side.

For the *horizontal dipole* (see the introduction) :

$$\vec{\Pi}=(\Pi_{x1}\Pi_3).$$

From (4) we obtain :

$$\left.\begin{aligned} E_r&=\cos\phi\frac{\partial^2\Pi_x}{\partial r^2}+\frac{\partial^2\Pi_z}{\partial r\partial z}+k_1^2\cos\phi\Pi_x \\ E_\phi&=-k_1^2\sin\phi\Pi_x-\frac{\sin\phi}{r}\frac{\partial\Pi_x}{\partial r} \\ &\quad+\frac{1}{r}\frac{\partial^2\Pi_z}{\partial\phi\partial z} \end{aligned}\right\} \quad (10)$$

$$\left.\begin{aligned} \frac{i}{k_1}H_\phi&=\cos\phi\frac{\partial\Pi_x}{\partial z}-\frac{\partial\Pi_3}{\partial r} \\ \frac{i}{k_1}H_r&=\frac{1}{r}\frac{\partial\Pi_z}{\partial\phi}+\sin\phi\frac{\partial\Pi_x}{\partial z} \end{aligned}\right\} \quad (10a)$$

For the primary excitation which appears only in Π_x we write

$$\Pi_{\text{prim}}=B\frac{e^{ik_1R}}{R} \quad \ldots \quad (11)$$

[7] The formulae for Π, E and H in medium II (and also for E_z in Medium I) are indispensable parts of the complete solution, but are not of direct importance for the following computation. They will be briefly given in Appendix 1 (at the end of the article).

Besides (7) we have here as particular solutions, which comply with the symmetry of the horizontal dipole,

$$\left.\begin{array}{l}\cos\phi\, J_1(\lambda r)e^{+\mu_1 z}\\ \cos\phi\, J_1(\lambda r)e^{+\mu_2 z}\end{array}\right\} \quad \ldots \quad \ldots \quad (12)$$

Instead of J_1 one can write $-J_0'$. From such particular solutions integrals are built up which can be adapted to the limiting conditions for $z = \sigma$ by a proper choice of the arbitrary functions of λ. In this way one finds for the medium I :—

$$\left.\begin{array}{l}\dfrac{\Pi_x}{B} = \displaystyle\int_0^\infty J(\lambda r)e^{\mp\mu_1(z-h)}\frac{\lambda d\lambda}{\mu_1}\\ \qquad + \displaystyle\int_0^\infty J(\lambda r)e^{-\mu_1(z+h)}\frac{\mu_1-\mu_2}{\mu_1+\mu_2}\frac{\lambda d\lambda}{\mu_1}\\ \dfrac{\Pi_z}{B} = 2\cos\phi\displaystyle\int_0^\infty J'(\lambda r)e^{-\mu_1(z+h)}\\ \qquad \dfrac{\mu_1-\mu_2}{N}\,.\,\lambda^2 d\lambda\end{array}\right\} \quad (13)$$

With regard to the meaning of the double sign, see the remarks following equation (8), also with regard to the change from one sign to the other when $z = h$. N is the same abbreviation as in (8a).

From equations (10) and (10a) for the two planes $z = h \pm \epsilon$ it follows :—

$$\frac{E_r}{B\cos\phi} = \int_0^\infty J''(\lambda r)f_1(\lambda)\lambda^3 d\lambda - \int_0^\infty J(\lambda r)f_2(\lambda)d\lambda$$

$$-\frac{E_\phi}{B\sin\phi} = -\frac{1}{r}\int_0^\infty J'(\lambda r)f_1(\lambda)\lambda^2 d\lambda + \int_0^\infty J(\lambda r)f_2(\lambda)d\lambda \quad \ldots \quad \ldots \quad (14)$$

$$\left.\begin{array}{l}-\dfrac{i}{k_1}\dfrac{H_r}{B\sin\phi} = \dfrac{1}{r}\displaystyle\int_0^\infty J'(\lambda r)f_3(\lambda)\lambda^2 d\lambda\\ \qquad + \displaystyle\int_0^\infty J(\lambda r)f_4(\lambda)d\lambda\\ -\dfrac{i}{k_1}\dfrac{H_\phi}{B\cos\phi} = \displaystyle\int_0^\infty J''(\lambda r)f_3(\lambda)\lambda^3 d\lambda\\ \qquad + \displaystyle\int_0^\infty J(\lambda r)f_4(\lambda)d\lambda\end{array}\right\} \quad (15)$$

The meaning of the abbreviations $f_1, f_2 \ldots$ is as follows: If one neglects ϵ compared with $2h$ (see above with regard to (9a))

$$\left.\begin{array}{l}f_1(\lambda) = -\dfrac{e^{-\epsilon\mu_1}}{\mu_1} + (\mu_1-\mu_2)e^{-2h\mu_1}\\ \qquad \left(\dfrac{2\mu_1}{N} - \dfrac{1}{\mu_1(\mu_1+\mu_2)}\right)\\ f_2(\lambda) = \dfrac{k_1^2}{\mu_1}\left(e^{-\epsilon\mu_1} + \dfrac{\mu_1-\mu_2}{\mu_1+\mu_2}e^{-2h\mu_1}\right)\end{array}\right\} \quad (16)$$

$$\left.\begin{array}{l}f_3(\lambda) = 2e^{-2h\mu_1}\dfrac{\mu_1-\mu_2}{N}\\ f_4(\lambda) = \pm e^{-\epsilon\mu_1} + e^{-2h\mu_1}\dfrac{\mu_1-\mu_2}{\mu_1+\mu_2}.\end{array}\right\} \quad (17)$$

3. Computation of the total flow of energy. Reduction of the triple integral to a simple integral.

Since the flow of energy is given in Gaussian units by $\frac{c}{4\Pi}[\underline{E}\underline{H}]$, in our case (see Fig. 1) the following expression has to be computed :—

$$[\underline{E}\,\underline{H}]_z = \underline{E}_r\underline{H}_\phi - \underline{E}_\phi\underline{H}_r \quad \ldots \quad \ldots \quad (18)$$

In this equation, $\underline{E}_r$, for example, indicates the *real part* of the complex quantity E_r with the time factor exp. $(-i\omega t)$ (see the beginning of section 2), that is to say, the expression :—

$\underline{E}_r = \frac{1}{2}(E_r e^{-i\omega t} + E_r^* e^{+i\omega t})$. Correspondingly

$$\underline{E}_r\underline{H}_\phi = \tfrac{1}{4}(E_r e^{-i\omega t} + E_r^* e^{+i\omega t})(H_\phi e^{-i\omega t} + H_\phi^* e^{+i\omega t}).$$

The average of values varying with time, which average alone matters when computing the radiation, amounts to :—

$$\overline{\underline{E}_r\underline{H}_\phi} = \tfrac{1}{4}(E_r^* H_\phi + E_r H_\phi^*) = \tfrac{1}{2}\mathrm{Re}\{E_r^* H_\phi\} \quad \ldots \quad \ldots \quad (19a)$$

"Re" means here and in the following "real part of." Likewise :—

$$\overline{\underline{E}_\phi\underline{H}_r} = \tfrac{1}{2}\mathrm{Re}\{E_\phi^* H_r\} \quad \ldots \quad \ldots \quad (19b)$$

We now compute for the vertical dipole the total average flow $S_\pm$ through the planes $z = h \pm \epsilon$ (see Fig. 1). Since $\underline{E}_\phi = \underline{H}_r = 0$,

$$S_\pm = \frac{c}{2}\int_0^\infty \overline{\underline{E}_r\underline{H}_\phi} r dr = \frac{c}{4}\mathrm{Re}\int_0^\infty E_r^* H_\phi r dr,$$

or in view of equations (9) for E_r and H_ϕ and with $J' = -J_1$:—

$$\frac{4S_\pm}{ck_1A^2} = \text{Re}\ \{-i\int_0^\infty rdr\int_0^\infty \lambda^2 d\lambda$$

$$\int_0^\infty l^2 dl f_1^*(\lambda) f_2(l) J_1(\lambda r) J_1(lr)\} \quad .. \quad (20)$$

In this equation the integration variable in the second equation (9), was changed from λ to l to distinguish it from that in the first equation line.

We now utilise the conditions (3), (3a) of orthogonality. Thereby the above triple integral is reduced to :—

$$\int_0^\infty \lambda^3 d\lambda f_1^*(\lambda) f_2(\lambda) \quad .. \quad .. \quad .. \quad (20a)$$

By introducing (9a), four members are obtained for the product $f_1^*(\lambda)f_2(\lambda)$. However, if we consider the energy flow through the *two planes* $z = h \pm \epsilon$, namely

$$S = S_+ - S_- \quad .. \quad .. \quad .. \quad (21)$$

only two members remain and we obtain from (20) :—

$$\frac{2S}{ck_1A^2} = \text{Re}\left\{-i\int_0^\infty \frac{\lambda^3 d\lambda}{\mu_1}\left(e^{-\epsilon(\mu_1^*+\mu_1)} - e^{-2h\mu_1}\frac{M}{N}\right)\right\} \quad .. \quad .. \quad (22)$$

In this equation, we have again neglected ϵ compared with h.

The first member can be evaluated at once if the actual conditions are taken into account, because according to (7) μ_1 is real for $\lambda > k_1$. Since, of course, also $\mu_1^* + \mu_1$ is real, after multiplying with $-i$ and forming of the real part, the integration from k_1 to ∞ can be dispensed with. Since now $\mu_1^* + \mu_1 = 0$, the remaining integration from 0 to k_1 can be carried out at once, and results in[8] :—

$$\int_0^{k_1} \frac{\lambda^3 d\lambda}{\mu_1} = \tfrac{2}{3} ik_1^3,\ \text{Re}\left\{-i\int_0^{k_1}\frac{\lambda^3 d\lambda}{\mu_1}\right\} = \tfrac{2}{3}k_1^3 \quad .. \quad .. \quad (22a)$$

We will first deal with that part of the second term of the integral in (22), which does not become zero if $k_2 \to \infty$. In view of the values (8a) for M and N,

$$\frac{M}{N} = -1 \text{ for } k_2 \to \sigma.$$

Therefore we replace in (22) $-\frac{M}{N}$ by $1 - \left(\frac{M}{N} + 1\right)$; thereby, the following two integrals are obtained :—

$$J = -\int_0^\infty e^{-2h\mu_1}\frac{\lambda^3 d\lambda}{\mu_1} \quad .. \quad .. \quad (22b)$$

and

$$K = \int_0^\infty e^{-2h\mu_1}\left(\frac{M}{N} + 1\right)\frac{\lambda^3 d\lambda}{\mu_1} \quad .. \quad (22c)$$

In (22) the second member in question becomes then :—

$$\text{Re}\ (iJ) + \text{Re}\ (iK).$$

With regard to the reality condition, the same holds good for J as was the case with the first term, that is to say, the integration may here also be limited to the range $0 < \lambda < k_1$, and can then easily be carried out. If one makes the substitution

$$\mu_1 = -i\sqrt{k_1^2 - \lambda^2} = -ik_1\mu \quad (22d)$$

J (with k_1 as upper limit) is transformed into :—

$$J = ik_1^3\int_0^1 e^{i\zeta u}(u^2 - 1)du \quad .. \quad (22e)$$

In this equation we have used the following abbreviation :—

$$\zeta = 2k_1h \quad .. \quad .. \quad .. \quad .. \quad (22f)$$

If we evaluate (22e) we obtain :—

$$J = k_1^3\left(1 + \frac{d^2}{d\zeta^2}\right)\frac{1 - e^{i\zeta}}{\zeta} \quad .. \quad (22g)$$

---

[8] In the basic formulae (8) and (13) the double meaning of μ_1 and μ_2 is generally so defined that the real part of both shall always be positive. In order to supplement this condition for $0 < \lambda < k_1$ in which range μ_1 is purely imaginary, one proceeds as follows. First one assumes a slight absorption in air. k_1^2 and k_2^2 lie then in the first quadrant, $\lambda^2 - k_1^2$ lies in the third quadrant, μ_1 in the fourth or second quadrant, but since the *real part* must be *positive*, the value lying in the fourth quadrant has to be taken ; from this it follows that even with no absorption, μ_1 which is then purely imaginary has to be taken with the *negative* side.

We remark in addition that correspondingly also μ_2, and in particular $\sqrt{-k_2^2}$ (this is the value of μ_2 for $\lambda = \sigma$) have to lie in the fourth quadrant. From this it follows that for the angle δ, which is to be introduced into (34), the following condition exists :—

$$-\frac{\Pi}{2} < \delta < \sigma.$$

Taking into account (22a), (22g) and the meaning of K in (22c) equation (22) can be transformed into

$$\frac{2S}{ck_1^4A^4} = \frac{2}{3} + \frac{2}{\zeta^2}\left(\frac{(\sin\zeta}{\zeta} - \cos\zeta\right) + \mathrm{Re}\left\{\frac{i}{k_1^3}K\right\} \quad \ldots \quad \ldots \quad (23)$$

On the other hand, we obtain for the *horizontal dipole* in view of (19a, b) :—

$$\overline{[E\,H]}_z = \tfrac{1}{2}\,\mathrm{Re}\,\{E_r^*H_\phi - E_\phi^*H_r\}.$$

Introducing $S_\pm$ we first integrate over ϕ, which leads in view of (14) and (15) to a factor Π_1 thus :—

$$S_\pm = \frac{c}{8}\,\mathrm{Re}\int_0^\infty rdr\{E_r^*H_\phi - E_\phi^*H_r\} \quad \text{and}$$

$$\frac{8S_+}{ck_1B^2} = \mathrm{Re}\,\{-i\int_0^\infty rdr\int_0^\infty \lambda d\lambda\int_0^\infty ldl[\;]\} \quad (24)$$

The brackets appearing in the last equation consist, after multiplying out the expressions (14) and (15), of eight terms comprising, beside the Bessel members, the products :—

$$f_1^*(\lambda)f_3(l),\;\; f_1^*(\lambda(f_4(l)\;\;.\;\;.\;\;.$$

However, according to (16) and (17) these are the same in S_+ and S_- with the exception of those comprising the factor f_4. Of f_4 only the first term having the signs $\pm$ has to be considered, and we can write it, using here the integration variable l, as follows :—

$$e^{-\epsilon m_1},\;\; m_1 = \sqrt{l^2 - k_1^2}.$$

If we proceed as in (21) to $S = S_+ - S_-$ the square bracket in (24) is considerably simplified, namely to

$$2e^{-\epsilon m_1}J(lr)\{\lambda^2J''(\lambda r)f_1^*(\lambda) + \frac{\lambda}{r}J'(\lambda r)f_1^*(\lambda) - 2J(\lambda r)f_2^*(\lambda)\}.$$

In this expression, the first two terms of the { } can, according to the Bessel differential equation, be combined to :—

$$-\lambda^2J(\lambda r)f_1^*(\lambda).$$

Thus, it follows from (24) :—

$$\frac{4S}{ck_1B^2} = \mathrm{Re}\,\{i\int_0^\infty rdr\int_0^\infty \lambda d\lambda\int_0^\infty ldle^{-\epsilon m_1} \cdot [\lambda^2f_1^*(\lambda) + 2f_2^*(\lambda)]J(\lambda r)J(lr)\} \quad \ldots \quad \ldots \quad (25)$$

Now, we use again the orthogonality equations (3), (3a) and we simply obtain for the last triple integral :—

$$\int_0^\infty \lambda d\lambda e^{-\epsilon\mu_1}[\lambda^2f_1^*(\lambda) + 2f_2^*(\lambda)] \quad \ldots \quad (25a)$$

By introducing this expression into (25) and for convenience replacing throughout $-i$ by $+i$ behind the symbol Re, we obtain :—

$$\frac{4S}{ck_1B^2} = \mathrm{Re}\,\{-i\int_0^\infty \lambda d\lambda e^{-\epsilon\mu_1*}[\lambda^2f_1(\lambda) + 2f_2(\lambda)]\} \quad \ldots \quad \ldots \quad (26)$$

According to (16) :—

$$\left.\begin{aligned}\lambda^2f_1(\lambda) + 2f_2(\lambda) &= \frac{2k_1^2 - \lambda^2}{\mu_1}e^{-\epsilon\mu_1} \\ &+ \frac{1}{\mu_1}\frac{\mu_1 - \mu_2}{\mu_1 + \mu_2}(2k_1^2 - \lambda^2)e^{-2h\mu_1} \\ &+ \frac{2\lambda^2\mu_1(\mu_1 - \mu_2)}{N}e^{-2h\mu_1}\end{aligned}\right\} \quad (26a)$$

In the second part of this equation we split off that part which does not become zero for $k_2 \to \infty$ that is to say

$$-\frac{1}{\mu_1}(2k_1^2 - \lambda^2)\exp.(-2h\mu_1).$$

Thus we obtain :—

$$\lambda^2f_1(\lambda) + 2f_2(\lambda) = \frac{2k_1^2 - \lambda^2}{\mu_1}(e^{-\epsilon\mu_1} - e^{-2h\mu_1}) + 2F(\lambda)e^{-2h\mu_1} \quad \ldots \quad \ldots \quad (27)$$

In this equation $F(\lambda)$ is an abbreviation for

$$F(\lambda) = \frac{2k_1^2 - \lambda^2}{2\mu_1}\left(\frac{\mu_1 - \mu_2}{\mu_1 + \mu_2} + 1\right) + \frac{\lambda^2\mu_1(\mu_1 - \mu_2)}{N} \quad \ldots \quad \ldots \quad (27a)$$

If in this equation one gives the members of the left-hand side the common denominator $(\mu_1 + \mu_2)\,N$ and multiplies the numerator and denominator by $\mu_1 - \mu_2$ one obtains simply :—

$$F(\lambda) = k_1^2\frac{\lambda^2 - 2\mu_1\mu_2}{N} \quad \ldots \quad \ldots \quad (27b)$$

If we introduce (27) into (26) and again neglect ϵ compared with $2h$ we obtain :—

$$\left.\begin{aligned}\frac{4S}{ck_1B^2} &= \mathrm{Re}\,\{-i\int_0^\infty \frac{\lambda d\lambda}{\mu_1}(2k_1^2 - \lambda^2)(e^{-\epsilon(\mu_1 + \mu_1^*)} - e^{-2h\mu_1})\} \\ &+ \mathrm{Re}\,\{-2i\int_0^\infty F(\lambda)e^{-2h\mu_1}\lambda d\lambda\}\end{aligned}\right\} \quad (28)$$

The first integral can easily be evaluated if the reality conditions are taken into account (the upper limit is again, as above, to be replaced by k_1). With the substitution (22d) and the abbreviation (22f) the integral is :—

$$ik_1^3 \int_0^1 du(1 + u^2)(1 - e^{i\zeta u})$$
$$= ik_1^3 \left[\frac{4}{3} - \left(1 - \frac{d^2}{d\zeta^2}\right)\frac{e^{i\zeta} - 1}{i\zeta}\right].$$

Thereupon, (28) can be transformed into :—

$$\frac{2S}{ck_1^4B^2} = \frac{2}{3} - \frac{1}{\zeta^2}\left(\frac{\sin\zeta}{\zeta}(\zeta^2 - 1) + \cos\zeta\right)$$
$$+ \text{Re}\left\{\frac{i}{k_1^3}L\right\} \quad .. \quad .. \quad (29)$$

with the abbreviation

$$L = -\int_0^\infty F(\lambda)e^{-2h\mu_1}\lambda d\lambda \quad .. \quad .. \quad (30)$$

The equations (23) and (29) give us the complete formulae for the radiation of a vertical and a horizontal dipole. The evaluated first terms, which refer to the earth being a perfect conductor could have been found without our analytical consideration. Essential for our purpose are the last terms, which are still written in the form of integrals, since they determine the influence of a finite conductivity of the earth.

4. Consideration of the Correcting Members

We call the still remaining terms "correcting terms" since they are small, of the order k_1/k_2 or of higher order. To give a preliminary orientation, we remark that for the material constants of sea water and for a wavelength of about 40 m. $\frac{k_1}{|k_2|} \sim \frac{1}{100}$. We shall limit ourselves to the *terms of the first order* in k_1/k_2. With regard to the terms of the second order, see appendix 6. For the vertical dipole we have to consider the integral K (see (22c) and (23), and for the horizontal dipole the integral L (see (27b) and (30)). Since we wish to obtain only a first approximation for the correcting term, we can make the following approximations with regard to the *horizontal* dipole. In the numerator of (27b) we can neglect λ^2 compared with $2\mu_1\mu_2$ notwithstanding the fact that λ varies from 0 to ∞, because large values of λ can be neglected during the integration in view of the factor exp. $(-2h\mu_1)$. In the denominator we can neglect

$$k_1^2\mu_2 \text{ compared with } k_2^2\mu_1 \quad .. \quad (31)$$

These two approximations are certainly inadmissible at the point $\lambda = k_1$ that is to say for $\mu_1 = \sigma$. In the proximity of this point, however, no substantial contribution to the integral is obtained as will be shown in appendix 6a.

In view of these explanations, we obtain :

$$F(\lambda) = -2\frac{k_1^2}{k_2^2}\mu_2.$$

We also replace

$$\mu_2 \text{ by } \sqrt{-k_2^2} \quad .. \quad .. \quad .. \quad (32)$$

Thus, we obtain from (30) :—

$$L = -\frac{2k_1^2}{\sqrt{-k_2^2}}\int_0^\infty e^{-2h\mu_1}\lambda d\lambda \quad .. \quad (32a)$$

The corresponding general integral is

$$-\frac{1}{4h^2}(2h\mu_1 + 1)e^{-2h\mu_1} \quad .. \quad .. \quad (32b)$$

In section 5 we shall use the same integral, but with the limits k_1 and ∞ and therefore we write :—

$$L = L_0^{k_1} + L_{k_1}^{\infty}.$$

With the abbreviation ζ from (22f) we obtain from (32b) :—

$$L = -\frac{2}{\zeta^2}\frac{k_1^4}{\sqrt{-k_2^2}}(1 - i\zeta)e^{i\zeta},$$

$$L_{k_1}^{\infty} = -\frac{2}{\zeta^2}\frac{k_1^4}{\sqrt{-k_2^2}} \quad .. \quad (32c)$$

Thus, for the horizontal dipole the correcting term of the first order becomes, in view of (29), (30) and (32c) :—

$$\text{Re}\left\{\frac{i}{k_1^3}L\right\} = -\frac{2}{\zeta^2}\frac{k_1}{|k_2|}\text{Re}\, i\{(1 - i\zeta)e^{i(\zeta-\delta)}\}$$
$$= -\frac{k_1}{k_2}\frac{2}{\zeta_2}(\zeta\cos(\zeta - \delta) - \sin(\zeta - \delta)).$$
$$.. \quad .. \quad (33)$$

In this equation, we put :

$$\sqrt{-k_2^2} = |k_2|e^{i\delta} \quad . \; . \; . \; \left(-\frac{\Pi}{2} < \delta < 0\right),$$

see footnote to equation (22a)

$$.. \quad .. \quad (34)$$

To carry out the corresponding computation for the vertical dipole, we have slightly to transform the expression $\frac{M}{N}+1$ appearing in (22c) by bringing the expression to the same denominator, making the denominator rational and utilising the abbreviation :—

$$u_0^2 = -\frac{k_1^2}{k_1^2 + k_2^2} \quad \ldots \quad \ldots \quad (34a)$$

In this way we find :—

$$\frac{M}{N} + 1 = \frac{2k_1^4}{k_1^4 - k_2^4} \frac{\lambda^2 - k_2^2 - \frac{k_2^2}{k_1^2}\mu_1\mu_2}{\lambda^2 - k_1^2(1 + u_0^2)} \quad \ldots \quad \ldots \quad (34b)$$

We retain only the second and third terms in the numerator of the second fraction which terms are respectively of the order k_2^2 and k_2^3 and, thus, have a preponderance over the first term; we cancel k_1^4 against k_2^4 in the denominator of the first fraction; with (32) and the substitution $\mu_1 = k_1 u$ which is analogous to that of (22d), we obtain then for the integrant of K in (22c) :—

$$e^{-\zeta u} \cdot \frac{2k_1^4}{k_2^2}(k_1 + \sqrt{-k_2^2}u)\frac{(1 + u^2)du}{u^2 - u_0^2}$$

We now multiply out, divide by $u^2 - u_0^2$, and transform the result into partial fractions. If in doing this, we only retain terms of the orders k_1/k_2 and k_1^2/k_2^2, we obtain :—

$$-e^{-\zeta u}\frac{2k_1^4}{\sqrt{-k_2^2}}\left(\frac{k_1}{\sqrt{-k_2^2}} + u + \frac{1}{u - u_0}\right)du \quad \ldots \quad \ldots \quad (34c)$$

In doing this, of the two possible values of u_0 that value has been chosen, which results in :—

$$u_0 = +\frac{k_1}{\sqrt{-k_2^2}} \quad \ldots \quad \ldots \quad (34d)$$

wherein $\sqrt{-k_2^2}$ has been taken as previously with positive real part. In view of this definition, the partial fraction having the denominator $u + u_0$ comprises a negligibly small factor. In the following part, also the first term in the bracket of (34c) may be cancelled, since it is of the second order in k_1/k_2. The second term of this bracket leads to the integral L in (32a), and is distinguished therefrom only in a formal way by the choice of the integration variables (previously λ now u). The third term of the same bracket finally furnishes the integral :—

$$G = \int_{-i}^{\infty} e^{-\zeta u}\frac{du}{u - u_0} \quad \ldots \quad \ldots \quad (34e)$$

In this way, we finally obtain from (34c) the first approximation of the correction for the vertical dipole :—

$$\mathrm{Re}\left\{\frac{i}{k_1^3}K\right\} = \mathrm{Re}\left\{\frac{i}{k_1^3}L\right\} - 2\,\mathrm{Re}\left\{\frac{ik_1}{\sqrt{-k_2^2}}G\right\} \quad \ldots \quad \ldots \quad (35)$$

The integral G which we have introduced here can be reduced to tabulated functions. For this purpose, we put :—

$$\zeta(u - u_0) = t.$$

We obtain without any approximation

$$G = e^{-\zeta u_0}\int_{-\zeta(i + u_0)}^{\infty} e^{-t}\frac{dt}{t} \quad \ldots \quad \ldots \quad (35a)$$

Since u_0 (see equation (34d)) is very small, we can write $e^{-\zeta u_0} = 1$. Therefore without numerical error (see however appendix 2) :—

$$G = \int_{-i\zeta}^{\infty} e^{-t}\frac{dt}{t} \quad \ldots \quad \ldots \quad \ldots \quad (35b)$$

A well known transformation leads to :—

$$G = \int_{-i\zeta}^{0}(e^{-t} - 1)\frac{dt}{t} + \int_{0}^{1}(e^{-t} - 1)\frac{dt}{t} + \int_{-i\zeta}^{1}\frac{dt}{t} + \int_{1}^{\infty} e^{-t}\frac{dt}{t} \quad \ldots \quad \ldots \quad (36)$$

The second and fourth terms together are equal to Euler's constant C taken with the negative sign. The third term is equal to

$$-\log(-i\zeta) = \frac{i\pi}{2} - \log\zeta.$$

If we write $-t = iS$ the first term becomes equal to :—

$$\int_0^{\zeta}(1 - e^{is})\frac{ds}{s} = \int_0^{\zeta}(1 - \cos s)\frac{ds}{s} - i\int_0^{\zeta}\sin s\frac{ds}{s}.$$

Altogether, we obtain for (36) :—

$$\left.\begin{aligned} G &= \int_0^{s}(1 - \cos s)\frac{ds}{s} - C - \log\zeta \\ &\quad - i\int_0^{s}\sin s\frac{ds}{s} + \frac{i\Pi}{2} \\ &= -Ci(\zeta) - iSi(\zeta) + \frac{i\Pi}{2} \end{aligned}\right\} \quad (36a)$$

In this equation, as usual :—

$$\left.\begin{aligned} Si(\zeta) &= \int_0^{\zeta} \sin s \frac{ds}{s} \text{ (integral sine)} \\ Ci(\zeta) &= C + \log \zeta - \int_0^{\zeta} (1 - \cos s) \frac{ds}{s} \\ &\text{(integral cosine).} \end{aligned}\right\} \quad (36b)$$

Thus, from (35) and (36a) it follows for our correcting member in its final form[9] :—

$$\left.\begin{aligned} \mathrm{Re}\left\{\frac{i}{k_1^3} K\right\} &= \mathrm{Re}\left\{\frac{1}{k_1^3} L\right\} \\ &+ 2\mathrm{Re}\left\{\frac{ik_1}{\sqrt{-k_2^2}}\left(Ci(\zeta) + iSi(\zeta) - \frac{i\Pi}{2}\right)\right\} \\ &= \mathrm{Re}\left\{\frac{1}{k_1^3} L\right\} + \frac{2k_1}{|k_2|}\Big[\sin\delta\, Ci(\zeta) \\ &- \cos\delta\left(Si(\zeta) - \frac{\Pi}{2}\right)\Big] \end{aligned}\right\} \quad (37)$$

With regard to the meaning of δ see (34).

(To be continued).

[9] For the vertical dipole, the calculations made by Niessen were carried so far that his results for the correcting term of the first order can be compared with our result. There exists no full agreement. This can be attributed, as will be discussed in more detail in appendix 3, to an approximation made by Niessen.

The Institution of Electrical Engineers

PROFESSOR C. L. FORTESCUE, O.B.E., M.A., City and Guilds College, has been elected President of the Institution of Electrical Engineers for the ensuing year. The director of the British Standards Institution, P. Good, C.B.E., has been elected to the vice-presidency. A. J. Gill, B.Sc.(Eng.), assistant engineer-in-chief, G.P.O., and A. H. Railing, D.Eng., vice-chairman, G.E.C., are among the six ordinary members elected to the Council.

To fill the vacancies which will occur on the Committee of the Wireless Section on September 30th the committee nominated the following, who have been duly elected: chairman, R. L. Smith-Rose, D.Sc., Ph.D. (National Physical Laboratory); vice-chairman, H. L. Kirke (B.B.C.); ordinary members of committee: A. D. Blumlein, B.Sc.(Eng.) (M.I.); E. C. S. Megaw, B.Sc. (G.E.C.); and A. Smale, B.Sc. (Cable and Wireless).

The Industry

BERYLLIUM-COPPER alloy in the form of strip, wire or rod is now included in the list of "Telcon" metals made by the Telegraph Construction and Maintenance Co., Ltd., Blackstone, Redhill, Surrey, from whom technical details may be obtained.

The type E.S.L. 50-C combined short- and long-wave radio transmitter is described in an illustrated pamphlet recently issued by Standard Telephones and Cables Ltd. (Radio Division), Oakleigh Road, New Southgate, London, N.11.

Details of "BI-Glass" insulated winding wires are given in a leaflet (N.S.W.1) issued by British Insulated Cables Ltd., Prescot, Lancs. Alkali-free glass filaments form the basis of the covering, which is rated for continuous operation at temperatures up to 140 deg. C.

For light instrument work a new electric soldering iron has been introduced by Runbaken Electrical Products, 71-73a, Oxford Road, Manchester, 1. The copper bit is $\frac{3}{16}$in. in diameter and the iron weighs 5 oz. The heater element requires 12 volts, and transformers suitable for any number of irons up to 50 are available.

Index to Abstracts and References, 1941

ERRATA

Page 1. American Philosophical Society's Committee, *for* 28 *read* 29.
Page 3. *For* Bucholz *read* Buchholz.
Page 5. Ehrenhaft, F., *after* magnetophotophoresis, 222, *add* 2974.
For Fairhust *read* Fairhurst.
Page 6. Fränz, K., noise voltages, *for* 3026 *read* 3027.
Page 7. *For* Ginhetti *read* Giulietti.
Page 12. Moon, P., *for* 323 *read* 3231.
Page 16. *Insert* Schnitger, H., secondary-emission films, 2718.
Page 30. *After* Ionosphere, *insert* (See also Echoes).

Sorting Salvage

SERIOUS hold-ups at the paper mills are resulting from the malpractice of many offices and factories throughout the country of allowing "foreign matter" to be included with the waste paper. In one mill production has dropped by 15 % in recent weeks as a result of the damage thereby caused to the plant. Other types of salvage are urgently needed, but they should on no account be included with the waste paper.

Correspondence

Letters of technical interest are always welcome. In publishing such communications the Editors do not necessarily endorse any technical or general statements which they may contain

The Frequency Spectrum

To the Editor, "Wireless Engineer."

SIR,—With reference to Mr. B. C. Fleming-Williams' letter on page 200 of your issue for May 1942, may I draw attention to two points.

In the first place it has always been the practice in physical optics and spectroscopy to measure wavelengths in tenth-metres or decade multiples thereof. The "tenth-metre" is a unit of length equal to 10^{-10} metre, and this is also termed the Ångström unit. This wavelength unit corresponds to a frequency of 3×10^{18} cycles per second; and the visible spectrum covers approximately the wavelength range 4 000 to 8 000 tenth-metres and corresponds to a frequency range of 3.75 to 7.5×10^{14} cycles per second. It is unusual, however, to find that a physicist, engaged on work in the visible or infra-red portions of the spectrum, is accustomed to think in terms of frequency, although this attitude may need to be modified if the present tendency of radio technique proceeds to many more decades of frequency multiplication.

Secondly, a very definite classification of radio frequencies and wavelengths on a decade scale was drawn up at the International Radio Communications Conference (C.C.I.R.) at Bucharest in 1937, and this was recommended for general use in radio communication technique. This metrical classification of wavelengths, with the corresponding frequencies, is given in the following table.

Designation of radio waves in terms of wavelength.	Wave-length in metres.	Designation of radio waves in frequencies.	Frequency in kilocycles per second.
myriametre	above 10 000	very low	below 30
kilometre	10 000–1 000	low	30–300
hectometre	1 000–100	intermediate	300–3 000
dekametre	100–10	high	3 000–30 000
metre ..	10–1	very high	30 000–300 000
decimetre ..	1–0.1	ultra-high	300 000–3 000 000
centimetre	0.1–0.01	super-high	3 000 000–30 000 000

In drawing up this table it was recognised that in practice, centimetre and decimetre waves might be expressed in centimetres, and that frequencies above 3 000 kc/s might be expressed in megacycles per seconds.

It will be noticed that while the specification of the frequency bands presented some difficulty in the choice of suitable adjectives, the designation by wavelength range is much more definite and self-explanatory. It would probably be beneficial to all of us if modern radio engineers and physicists were to use the terms given in the first column of the above table, and avoid the confusion which constantly arises from the use of terms such as V.H.F., U.H.F., micro-wave, which have long since ceased to have any precise meaning. The above table, with the possible addition of a line for millimetre waves covering wavelengths of 0.01 to 0.001 m (or 1.0 to 0.1 cm) and frequencies of 30 000 to 300 000 Mc/s, would appear to satisfy all practical radio communication requirements for some time to come. A millimetre wave, which is of 10^7 tenth-metres in wavelength, corresponds approximately to the upper limit of the infra-red spectrum, and is over three decades above the visible spectrum.

R. L. SMITH-ROSE

National Physical Laboratory,
Teddington, Middlesex.

Signal/Noise Ratio of Cathode Follower

To the Editor, "Wireless Engineer"

SIR,—The purpose of this note is to compare the signal/noise ratio of the conventional pentode amplifier shown schematically in Fig. 1 with that of the triode cathode-follower shown in Fig. 2. The valve noise in each case will be represented by an equivalent fluctuation current I_p or I_t for pentode or triode respectively, which flows in the same circuit as the signal component of anode current; the latter is taken to be equal to GV_g where G is the mutual conductance of the valve and V_g the signal voltage at the input to the valve.

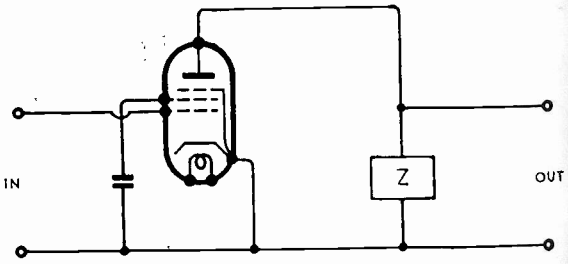

Fig. 1.

In Fig. 1, the r.m.s. noise output is obviously ZI_p, and the signal output GZV_g; the signal/noise ratio is then GV_g/I_p. It is well known that the output impedance of a cathode-follower is approximately equal to $1/G$; even with a triode there is no great error in using this approximation if G is of the order of 8 mA/V, and Z_c small compared with the differential resistance of the valve. The cathode signal voltage in Fig. 2 will be $GZ_cV_g/(1 + GZ_c)$, and the cathode noise voltage $Z_cI_t/(1 + GZ_c)$, so that the signal/noise ratio is

GV_g/I_t. Since the r.m.s. noise current in a triode is less than that in a pentode of similar mutual conductance by a factor of 2 or 3 to 1, the signal/noise ratio of Fig. 2 is 6 or 8 db. better than that of Fig. 1.

Up to the point Z_c, Fig. 2 is not a *voltage* amplifier, but it is none the less an amplifier because Z_c will normally be so much less than the input impedance that the power in Z_c will be greater than the input power; one can then use a step-up transformer from Z_c to the desired output impedance, which will be assumed equal to the Z of Fig. 1. For

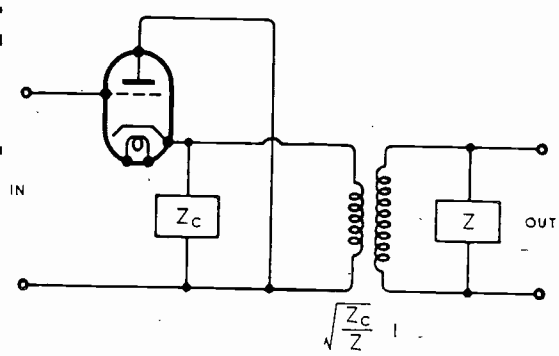

Fig. 2.

maximum power output Z_c will be made equal to the output impedance, $1/G$ of the valve, so that the transformer ratio is $\sqrt{(Z/Z_c)} = \sqrt{(GZ)}$; the cathode-earth voltage is then $V_g/2$ and the voltage at the secondary of the transformer is $(V_g/2)\sqrt{GZ}$. The gain is less than that of Fig. 1 by the factors of 2 and $\sqrt{GZ}$.

Since the improvement in signal/noise ratio is due solely to the fact that I_t is less than I_p, the cathode-follower amplifier is merely a device for using a triode instead of a pentode, and the input impedance must be calculated to make the comparison complete. It will be assumed that the grid-cathode impedance of either triode or pentode consists of a capacitance C_g and resistance R_g in parallel, and that a current i_g flows in the input circuit when an e.m.f. E is applied, so that the input admittance is i_g/E. The resultant e.m.f. in the grid-cathode circuit is

$$E - V_c = E\left\{1 - \frac{GZ_c}{1 + GZ_c}\right\} = \left\{\frac{E}{1 + GZ_c}\right\} \quad \cdots \quad (1)$$

where V_c is the cathode-earth voltage. The total impedance of this circuit is

$$Z_c + \frac{R_g}{1 + j\omega CR_g} = \frac{R_g + Z_c(1 + j\omega CR_g)}{1 + j\omega CR_g} \quad (2)$$

so that dividing (1) by (2) the current is

$$i_g = \frac{E(1 + j\omega CR_g)}{(1 + GZ_c)[R_g + Z_c(1 + j\omega CR_g)]} \quad \cdots \quad (3)$$

For the particular case examined above, $GZ_c = 1$, equation (3) results in a value of input admittance

$$\frac{i_g}{E} = \frac{1 + j\omega CR_g}{2[R_g + (1/G)(1 + j\omega CR_g)]} \quad \cdots \quad (4)$$

Separating the real and imaginary parts of equation (4)

Input Conductance

$$= \tfrac{1}{2} \cdot \frac{R_g + 1/G + \omega^2C^2R^2_g/G}{(R_g + 1/G)^2 + \omega^2C^2R^2_g/G^2} \quad \cdots \quad \cdots \quad (5)$$

Input Susceptance

$$= \tfrac{1}{2} \cdot \frac{\omega CR^2_g}{(R_g + 1/G)^2 + \omega^2C^2R^2_g/G^2} \quad \cdots \quad \cdots \quad (6)$$

Equations (3) and (5) yield two important pieces of information. First, so long as Z_c is purely resistive, the input resistance cannot become negative, and the amplifier is therefore stable. Second, the input conductance is reduced by a factor greater than 2, so that where the input conductance of the valve is a serious factor, the difference between the gain of the cathode-follower stage and the conventional amplifier stage is not as great as was suggested above. The circuit of Fig. 2 may therefore be of interest where it is necessary to obtain the utmost signal/noise ratio.

D. A. BELL.

A. C. Cossor, Ltd.,
Research Dept.

"Pulsatance, Rotatance or Velocitance?"

To the Editor, "Wireless Engineer"

SIR,—As the magnitude in question is a measure of the speed at which the phase of the sine-argument changes, why not call it "phase rate"?

The following points seem to me in favour of this designation:

(1) It obviates the formation of an entirely new word.

(2) It does not sound too badly; *c.f.*: "a current with a phase rate of 1,000 radians/second."

(3) It is short (at least one syllable less than its competitors).

(4) Its meaning may be roughly guessed by those who encounter it for the first time.

(5) It does not depend on the previous introduction of the vector concept.

Wembley Park, Mdx. A. BLOCH.

The Institute of Physics

AT the recent Annual General Meeting of the Institute of Physics, Professor Sir Lawrence Bragg was re-elected as president. Together with the vice-presidents, Dr. W. Makower and Mr. T. Smith he will take office on October 1st. Major C. E. S. Phillips and Professor J. A. Crowther are once again honorary treasurer and honorary secretary respectively.

GOODS FOR EXPORT

The fact that goods made of raw materials in short supply owing to war conditions are advertised in this journal should not be taken as an indication that they are necessarily available for export.

Wireless Patents

A Summary of Recently Accepted Specifications

The following abstracts are prepared, with the permission of the Controller of H.M. Stationery Office, from Specifications obtainable at the Patent Office, 25, Southampton Buildings, London, W.C.2, price 1/- each

ACOUSTICS AND AUDIO-FREQUENCY CIRCUITS AND APPARATUS

544 103.—Means for reducing the time lag between switching-on and normal operation of a resistance-capacity-coupled A.F. amplifier with long time-constant circuits.

The British Thomson-Houston Co. and J. Moir. Application date 25th October, 1940.

544 175.—Means for minimising the particular form of "noise" which is produced in an amplifier with negative feed-back applied between two stages operating at different levels of power.

Standard Telephones and Cables (assignees of J. B. Harley and Van M. Cousins). Convention date (U.S.A.) 2nd February, 1940.

AERIALS AND AERIAL SYSTEMS

543 771.—Means for tuning or varying the effective length of coaxial or parallel transmission lines.

Marconi's W.T. Co. and J. M. Young. Application date 8th August, 1940.

544 499.—Directive aerial system comprising a straight wire backed by a parabolic reflector of staggered wave sections.

Marconi's W.T. Co. (assignees of N. E. Linden Blad). Convention date (U.S.A.) 22nd November, 1939.

544 684.—Raising and lowering gear for the trailing aerials used on aircraft.

Lear Avia Inc. Convention date (U.S.A.) 15th December, 1939.

DIRECTIONAL WIRELESS

543 873.—Installation for training pupils to learn direction-finding on a radio-goniometer fitted for sense discrimination.

Rediffusion and G. B. Ringham. Application date 21st October, 1940.

RECEIVING CIRCUITS AND APPARATUS

(See also under Television)

543 574.—Arrangement for improving the accuracy of the tuning adjustment provided by automatic controls of the push-button type.

Philips Lamps. Convention date (Netherlands) 5th June, 1939.

543 576.—Rotary control gear for automatically switching multiple circuits to predetermined tuning positions.

Philips Lamps. Convention date (Netherlands) 17th June, 1939.

543 580.—Frequency-mixing circuit for a superheterodyne receiver in which the input and output capacitances are kept low and in which valve noise is reduced.

Philips Lamps. Convention date (Netherlands) 13th July, 1939.

543 639.—Operating gear for tuning a wireless receiver by push-button control.

Philips Lamps (communicated by N. V. Philips' Gloeilampenfabrieken). Application date 17th May, 1940.

543 777.—Switch tuning system for a multi-band wireless receiver designed to allow a rapid change-over between predetermined settings on the various bands.

A. C. Cossor; L. H. Bedford; K. I. Jones; and W. A. Knight. Application date 9th September, 1940.

543 864.—Operating mechanism for the ganged cores of permeability-tuned wireless sets.

Johnson Laboratories Inc. (assignees of M. J. Kirk). Convention date (U.S.A.) 2nd October, 1939.

544 095.—Push-button receiver in which a common driving motor is employed to control both the wave-change switch and the station-selecting circuits.

Philips Lamps (communicated by N. V. Philips' Gloeilampenfabrieken). Application date 10th June, 1940.

544 097.—Means for equalising the performance of band-spread tuning devices. [Addition to 536 412.]

Philips Lamps (communicated by N. V. Philips' Gloeilampenfabrieken). Application date 19th June, 1940.

544 098.—Band-spread tuning-device applied to a short-wave multi-band receiving set. [Addition to 536 412.]

Philips Lamps (communicated by N. V. Philips' Gloeilampenfabrieken). Application date 25th June, 1940.

544 140.—Construction of band-pass filters comprising sections which operate as "frequency traps."

Hazeltine Corporation (assignees of H. A. Wheeler). Convention date (U.S.A.) 29th September, 1939.

544 144.—Compact form of filter-circuit for suppressing high-frequency disturbances produced, say, by the dialling of an automatic telephone.

Standard Telephones and Cables (assignees of A. J. Christopher and F. W. Webb). Convention date (U.S.A.) 29th September, 1939.

544 418.—Selective circuit for discriminating between a desired frequency such as a calling signal and a complex current which includes that frequency, such as speech.
B. M. Hadfield. Application date 10th October, 1940.

544 641.—Short-wave valve amplifier with at least two cathode leads, one of which is included in the input and another in the output circuit.
Philips Lamps (communicated by N. V. Philips' Gloeilampenfabrieken). Application date 22nd July, 1940.

544 696.—Detecting or rectifying frequency-modulated signals by a circuit which is automatically silenced when mistuned.
Marconi's W.T. Co. (assignees of W. R. Koch). Convention date (U.S.A.) 31st January, 1940.

544 808.—Regulating the sensitivity by the use of self-biasing cathode resistances in successive stages of amplification.
Fabrica Italiana Magneti Marelli. Convention date (Italy) 12th May, 1939.

TELEVISION CIRCUITS AND APPARATUS

For Transmission and Reception

543 709.—Method of correlating the picture signals and synchronising impulses in television in order to secure a correct background or overall illumination.
Marconi's W.T. Co. (assignees of R. D. Kell). Convention date (U.S.A.) 31st August, 1939.

543 710.—Focusing arrangement for a picture-intensifying tube in which electrons emitted by a photo-sensitive cathode are reflected back from a secondary-emission electrode to the receiver viewing screen.
Marconi's W.T. Co. (assignees of A. Rose). Convention date (U.S.A.) 31st August, 1939.

553 802.—Light-modulating device, particularly suitable for a system of "simultaneous" television.
Scophony and F. Okolicsanyi. Application date 8th July, 1941.

544 403.—Wide-band R.F. amplifier designed to pass both the picture signals and the comparatively narrow synchronising impulses used in television transmissions.
Philco Radio and Television Corporation (assignees of F. J. Bingley). Convention date (U.S.A.) 24th May, 1939.

544 542.—Diode arrangement for separating the picture signals and synchronising impulses in a television receiver.
Cie pour la Fabrication des Compteurs &c. Convention date (France) 8th June, 1938.

TRANSMITTING CIRCUITS AND APPARATUS

(See also under Television)

543 924.—Preventing grid-current distortion in a modulating system in which the signal and carrier wave are derived from sources which may have a poor voltage regulation.
Standard Telephones and Cables (assignees of F. E. Terman). Convention date (U.S.A.) 9th January, 1940.

544 250.—Negative feed-back circuit for varying the frequency characteristic of a transmission system or for equalising its attenuation.
Telephone Manufacturing Co. and L. H. Paddle. Application date 23rd April, 1941.

544 319.—Unidirectional microphone of the vibrating-ribbon type.
Marconi's W.T. Co. (assignees of H. F. Olson). Convention date (U.S.A.) 2nd January, 1940.

544 502.—Means for automatically preventing casual frequency drift in the carrier wave of a frequency-modulated or phase-modulated system and for rendering the control inoperative in the presence of a signal.
Marconi's W.T. Co. (assignees of H. Tunick). Convention date (U.S.A.) 22nd December, 1939.

544 596.—Construction of a directional microphone comprising a number of parallel pipes to ensure a symmetrical distribution of sound relatively to the directional axis.
Marconi's W.T. Co. (assignees of H. F. Olson). Convention date (U.S.A.) 30th November, 1939.

544 668.—Method of mounting a piezo-electric crystal oscillator so that it will maintain a constant frequency in spite of temperature changes.
Marconi's W.T. Co. (assignees of J. B. Atwood). Convention date (U.S.A.) 24th November, 1939.

544 682.—Construction of high-frequency "tanks" or resonators with spherical and conical surfaces.
Electrical Research Products Inc. Convention date (U.S.A.) 9th December, 1939.

544 746.—Two-way signalling over a single transmission line by utilising different side-band combinations of the same carrier frequency.
Standard Telephones and Cables and F. Fairley. Application date 24th October, 1940.

CONSTRUCTION OF ELECTRONIC-DISCHARGE DEVICES

543 592.—Arrangement of the coaxial and tubular resonator electrodes in a high-frequency oscillator of the electron-bunching type. [Addition to 541 477.]
Marconi's W.T. Co. (assignees of A. V. Haeff Convention date (U.S.A.) 31st August, 1939.

543 640.—Construction of a beam-deflection type of valve designed to facilitate variation in slope, particularly for the purpose of automatic volume control.
The Mullard Radio Valve Co. (communicated by N. V. Philips Gloeilampenfabrieken). Application date 20th May, 1940.

543 666.—Electron-discharge tube of the gas-filled type with an externally applied magnetic control device.

The British Thomson-Houston Co. Convention date (U.S.A.) 29th December, 1939.

543 752.—Arrangement of the focusing and control elements for single or multiple electron beams as employed for generating or amplifying ultra-short waves.

Marconi's W.T. Co. (assignees of A. V. Haeff and L. P. Smith). Convention date (U.S.A.) 13th September, 1939.

543 890.—Electrode arrangement of a television transmitting tube, with low-velocity scanning beams and electron multipliers.

Marconi's W.T. Co. (assignees of H. A. Iams). Convention date (U.S.A.) 24th June, 1939.

543 920.—Construction of indirectly-heated cathode with flat spiral heaters for a cathode-ray tube.

British Thomson-Houston Co. and L. Rushforth. Application date 29th November, 1940.

544 225.—Electrode arrangement for a secondary-emission tube designed to combine a low inter-electrode capacity with a high internal resistance when handling high frequencies.

The Mullard Radio Valve Co. (communicated by N. V. Philips' Gloeilampenfabrieken). Application date 3rd June, 1940.

544 232.—Deflection-beam type of valve which is suitable for amplification purposes or as a volume-control device.

Marconi's W.T. Co. (assignees of H. M. Wagner and T. J. Henry). Convention date (U.S.A.) 30th September, 1939.

544 413.—Cathode-ray tube provided with a number of "replacement" fluorescent screens.

J. L. Baird. Application date 7th September, 1940.

SUBSIDIARY APPARATUS AND MATERIALS

543 572.—Liquid cooling arrangement for rectifiers of the so-called blocking-layer type.

Philips Lamps (communicated by N. V. Philips Gloeilampenfabrieken). Application date 30th May, 1940.

543 766.—Means for scrambling or inverting and restoring the component frequency bands in a secret system of telephony.

E. Y. Webb, Junr. Application date 3rd June, 1940.

543 841.—Means for facilitating the replacement or repair of sections of the line in a multi-channel carrier-wave signalling system.

Standard Telephones and Cables (assignees of B. J. Kinsburg; J. P. Kinzer; J. B. Maggio; E. K. van Tassel; and I. G. Wilson). Convention date (U.S.A.) 28th September, 1939.

543 943.—Means for controlling the gain and frequency-modulations in a radio altimeter utilising the heterodyne method of measurement.

Marconi's W.T. Co. (assignees of I. Wolff and R. C. Sanders). Convention date (U.S.A.) 1st September, 1939.

543 977.—Cathode-ray indicator for tracing the patterns or sets of characters used in tabulating or recording systems.

G. H. Baillie (communicated by International Business Machines Corporation). Application date 12th August, 1940.

544 039.—Hand-driven generator for operating the power switch in a remote-control system for a wireless set.

Philips Lamps (communicated by N. V. Philips' Gloeilampenfabrieken). Application date 28th June, 1940.

544 044.—Construction of variable inductance of the spade-tuning type.

J. H. Reyner. Application date 8th August, 1941.

544 302.—Circuit arrangement for coupling a load to power mains through an indirectly-heated rectifier valve.

Philips Lamps (communicated by N. V. Philips' Gloeilampenfabrieken). Application date 6th June, 1941.

544 406.—Balanced-bridge circuit of rectifiers for suppressing the carrier-wave component in modulating and demodulating systems.

Philips Lamps (communicated by N. V. Philips' Gloeilampenfabrieken). Application date 10th July, 1940.

544 447.—Circuit arrangement including thermally-responsive devices for automatically replacing a burned-out valve.

Standard Telephones and Cables and B. B. Jacobsen. Application date 11th October, 1940.

544 475.—Low-loss resonator for very high frequencies, comprising a tubular ceramic element with an interior metallic layer.

Philips Lamps (communicated by N. V. Philips' Gloeilampenfabrieken). Application date 8th July, 1940.

544 533.—Device for automatically indicating the optimum region of the short-wave band for operation at different periods of the day and night.

N. A. M. McKie. Application date 22nd April, 1941.

544 569.—Sound transmission system incorporating means for compressing and subsequently expanding the volume range.

Electrical Research Products Inc. Convention date (U.S.A.) 5th April, 1940.

544 733.—Material and process for producing highly-sensitive photo-electric surfaces.

Marconi's W.T. Co. (assignees of W. Hickok). Convention date (U.S.A.) 27th February, 1940.

Abstracts and References

Compiled by the Radio Research Board and reproduced by arrangement with the Department of Scientific and Industrial Research

For the information of new readers it is pointed out that the length of an abstract is generally no indication of the importance of the work concerned. An important paper in English, in a journal likely to be readily accessible, may be dealt with by a square-bracketed addition to the title, while a paper of similar importance in German or Russian may be given a long abstract. In addition to these factors of difficulty of language and accessibility, the nature of the work has of course, a great influence on the useful length of its abstract.

	PAGE		PAGE
Propagation of Waves	365	**Directional Wireless**	376
Atmospherics and Atmospheric Electricity	369	**Acoustics and Audio-Frequencies**...	377
Properties of Circuits	370	**Phototelegraphy and Television** ...	378
Transmission	371	**Measurements and Standards** ...	380
Reception	372	**Subsidiary Apparatus and Materials**	383
Aerials and Aerial Systems ...	374	**Stations, Design and Operation** ...	387
Valves and Thermionics	375	**General Physical Articles**	387
		Miscellaneous	388

PROPAGATION OF WAVES

2267. THE ELECTRICAL FUNDAMENTAL OSCILLATION OF THE CYLINDRICAL TWO-LAYER CAVITY [with Application to Measurement of Dielectric Constants].—Borgnis. (*See* 2306.)

2268. ELECTROMAGNETIC WAVES IN RECTANGULAR METAL TUBES.—G. W. O. H: Kemp. (*Wireless Engineer*, March 1942, Vol. 19, No. 222, pp. 93–96.) Editorial on the paper dealt with in 2958 of 1941.

2269. "ELLIPTIC CYLINDER AND SPHEROIDAL WAVE FUNCTIONS: INCLUDING TABLES OF SEPARATION CONSTANTS AND COEFFICIENTS" [Book Review].—J. A. Stratton & others. (*Review Scient. Instr.*, April 1942, Vol. 13, No. 4, p. 180.) *See* also 1594 of June.

2270. RECOLLECTIONS OF AMATEUR RECEPTION REPORTS ON 5, 2½, AND 1¼ METRE WAVES.—E. P. Tilton. (*QST*, April 1942, Vol. 26, No. 4, pp. 36–37 and 60.) In his series "On the Ultra Highs."

2271. THE VELOCITY OF RADIO WAVES OVER SHORT PATHS [Twice the Base-Line of 0.73 and 3.67 km].—R. C. Colwell, H. Atwood, J. E. Bailey, & C. O. Marsh. (*Proc. I.R.E.*, March 1942, Vol. 30, No. 3, pp. 129–131.) Summaries were dealt with in 2337 of 1941.

2272. APPLICATION OF THE THEORY OF RANDOM SCATTERING ON THE INTENSITY VARIATIONS OF THE DOWNCOMING WIRELESS WAVES OVER LONG TRANSMISSION PATHS [Test of Applicability of Pawsey's Medium-Wave Short-Range Results (1313 of 1935) to Distances up to 610 km: Conclusion that, for Long Paths, Additional Factors must be involved].—M. M. Sen Gupta & S. K. Dutt. (*Indian Journ. of Phys.*, Dec. 1941, Vol. 15, Part 6, pp. 447–453.)

It is pointed out that the work of Khastgir & Ray (1005 of 1941), supporting the adequacy of the random-scattering theory, was over a distance not more than 245 km, and the ground-wave component was 3–4 times stronger than the sky-wave component: "moreover, the data were secured from visual observation of galvanometer deflections."

2273. THE RATE OF ION-PRODUCTION AT ANY HEIGHT IN THE EARTH'S ATMOSPHERE: I—THE SPHERICAL HARMONIC REPRESENTATION OF ITS WORLD-WIDE DISTRIBUTION: II—THE FOURIER EXPRESSION FOR ITS DAILY VARIATION.—S. Chapman & A. Majid Mian. (*Terr. Mag. & Atmos. Elec.*, March 1942, Vol. 47, No. 1, pp. 31–44.)

Based on Chapman's idealised theory of ionisation by monochromatic radiation (1931 & 1932 Abstracts, pp. 202 & 27: three corrections to these papers are now given in a footnote) in an atmosphere exponentially distributed in height and uniformly distributed over the earth. The object of the paper is to prepare the way for a more accurate development of Stewart's dynamo theory. For recent work by the same writers *see* 1282 of May.

2274. SUMMARY OF THE YEAR'S WORK, TO JUNE 30TH, 1941, DEPARTMENT OF TERRESTRIAL MAGNETISM, CARNEGIE INSTITUTION OF WASHINGTON.—J. A. Fleming. (*Terr. Mag. & Atmos. Elec.*, March 1942, Vol. 47, No. 1, pp. 45–52.)

"Principle of efficient sampling in geophysical statistics": no observable effect of solar flares on atmospheric-electric phenomena at Earth's surface: "at least two phenomena previously unobserved" in polar-ionosphere investigations (not described):

preliminary results in attempts to correlate variations in light from night sky with ionospheric measurements (*cf.* 2275, below): etc.

2275. INTENSITY OF THE LIGHT OF THE NIGHT SKY: MAGNETIC DISTURBANCES: BEHAVIOUR OF THE F_2 LAYER.—G. Leithäuser. (*Funktech. Monatshefte*, March 1942, No. 3, pp. 29–33.)

Martyn & Pulley first called attention (2073 of 1936) to a correlation between the seasonal and diurnal variations of the green-line intensity of the night sky and the F_2 electron concentration. Hechtel (944 of April) has published a series of recent "N.H.L." intensity measurements. These values allow a comparison to be made with other data connected with conditions in the ionosphere, particularly the F_2 layer. In a previous paper (400 of 1938) the present writer & Beckmann pointed out a relation between the "invasion layers" (produced by auroral discharges) and magnetic disturbances of the earth's field. It was found that the layers appearing during auroras, above the F region, gradually sink and come into mutual action with the F layer as soon as they have arrived at a certain distance from this: the F layer is pulled up and at the same time its ionisation decreases. The equilibration of charges produces magnetic disturbances which are heightened by the fact that the upper parts of the layers probably take no part in the earth's rotation, so that the relative motion produces an increased effect. This hypothesis is supported by the fact that the ionospheric disturbances of the invasion layers appear on the recording strips day after day with diminishing intensity at the same time of day: the corresponding magnetic disturbances appear, also with decaying intensity, at the times of return of the invasion layers. As a result of the charge changes at the first contact between invasion layer and upper F layer there occurs at that instant a strong magnetic disturbance in all elements of the record. The duration of the subsequent magnetic storm depends on the strength of the invasion and on its periodic occurrence. The magnitude of the magnetic disturbances can therefore always be taken in northern latitudes as a measure of auroral activity.

Now if the N.H.L. is directly connected with the appearance of aurora, it is to be expected that its intensity would be directly affected by the frequency and strength of the invasion layers. Since no records of these layers, for the period of the N.H.L. measurements, were available to the writer, this comparison could not be made. But if the intensity of the N.H.L. depends on the auroral intensity, then from what has been said above there should be a connection between N.H.L. intensity and magnetic disturbances, and it is this connection which the writer looks for, with the help of Potsdam geomagnetic data for the period in question (for the purposes of his diagrams—broken-line curves—the writer adds together the disturbance character number and the curve-form number "which, as regards the formation of aurora, is at least of equal importance.") Between mid-March and September (in Figs. 1 a & b) there is no connection between N.H.L. (full line curves) and magnetic disturbance: this is to be expected, since in high northern latitudes at this season the F_1 layer is maintained by solar radiation, and charge-equalisation between this and the invasion layers causes very violent magnetic disturbances. Whether aurora of notable brightness is thereby produced is doubtful: probably not, since the N.H.L. intensity falls steadily to a marked minimum in May. During the winter months, on the other hand, the N.H.L. shows sudden rises either contemporaneous with or lagging slightly behind large magnetic disturbances: this lag might be accounted for by the non-participation of the invasion layers and auroral discharges in the earth's rotation. Occasionally however the N.H.L. peaks seem to lead, instead of lagging: such discrepancies are discussed in the last paragraph of p. 30. Fig. 2 shows average values for the quantities in question over the whole period: the writer states "Here again no correlation exists in the months March to June, while in the other months it is recognisable."

Hechtel (*loc. cit.*) found in general a positive correlation between max. F_2 ionisation and N.H.L. intensity, but noted a clear rise in the latter during a clear fall in the former, in December/January. This apparent anomaly is explained by the present writer by "the general behaviour of the F_2 layer" as interpreted by him (pp. 31–33). He declines to believe in the high temperatures essential to the thermal-expansion mechanism assumed by Appleton, Hulburt, and Harang [*see* for example 2920 of 1935] to explain the daily and seasonal behaviour of the F_2 layer. This behaviour "is completely explained by the assumption that in the F_2 region, in the presence of very strong ionisation and a corresponding gradient, the attenuation will show a characteristic different from that in the E and F_1 regions and will, from a certain point of electron concentration onwards, increase for increasing frequencies." The equation for K (just above Fig. 3) taken from Beckmann's book, shows that when ϵ_0 is nearly equal to unity K is the larger, the lower the frequency; while for high frequencies the attenuation is so comparatively small that the possibility of reflection is obtained. In the neighbourhood of the reflection point, on the other hand, the K equation at the top of p. 32 holds, and the attenuation increases with increasing frequency. There is no reason to assume a sudden change in the curve of the attenuation within the layer: it is much more probable that it occurs gradually, so that the increase of attenuation with increasing frequency begins to occur even where ϵ_0 is still comparatively small. The collision number s must be very large in the region of strong electron concentration, and a steep gradient must exist in the layer, since echo records for strong ionisation show that the F_2 layer is present as an independent reflecting layer separate from the F_1 region.

The result of the above considerations is that when the usual critical-frequency measurements are carried out in the conditions mentioned above (very strong ionisation and a corresponding gradient), what is obtained is *not* the point of maximum electron concentration in the layer concerned: this lies much higher. What is actually found is a critical frequency determined by any plane within the layer from where on, as the electron concentration increases, the attenua-

tion rises with increasing frequency. The whole behaviour of the F_2 layer is thus explained simply: in the summer months, in spite of very high ionisation, a too small critical frequency is obtained because a region of increasing attenuation with increasing frequency is formed within the layer. The increasing electron concentration during the afternoon, found in summer, is explained by a decrease, as the sun gets lower, of the very high noon concentration, and a reduction of the gradient through recombination: with the result that the border zone between increasing and decreasing attenuation becomes displaced, until finally the region of increasing attenuation disappears and the critical-frequency technique shows a higher concentration. Similarly the peculiarity of the F_2 layer in showing a weak midnight maximum in winter is explained by the layer becoming more homogeneous at midnight, with the region of increasing attenuation disappearing and allowing the measuring technique to reveal the higher ionisation which was present all the time but which had hitherto been masked.

Next, Harang's observations (reference "5") on the strong increase of F_2 concentration at the beginning of auroral displays, followed quickly by a decrease (so great in the case of strong auroras that F_2 reflection stops altogether), are explained by the same theory: the measurements indicate correctly the sudden increase in ionisation at the appearance of the aurora, so long as the attenuation in the layer decreases with increasing frequency. But if the collision-number increases considerably as a result of strong electron concentration, a reversal zone is formed as before and the maximum concentration can no longer be measured, but only the ionisation in the reversal zone: finally the attenuation increases throughout the whole layer to the extent that no more reflection occurs.

The writer then considers the mean-critical-frequency curves for the period 1933/38 taken from a paper by Smith, Gilliland, & Kirby, and especially the apparent displacement, as solar activity increases, of the morning and afternoon maxima from December to November: in 1937/38, in particular, the Dec./Jan. curves show a decrease in critical frequency. But this trough is due to high auroral activity, producing an ionisation increase large enough to cause an attenuation-reversal: the decrease in F_2 ionisation is only fictitious. The same thing applied to Hechtel's results, mentioned above: his anomaly, that an increase in N.H.L. accompanied a clear decrease in F_2 max. concentration in Dec./Jan., is explained by the fact that his Oct./Nov. maximum is only an apparent one, the true maximum being in Dec./Jan. "Thus there is a complete agreement between the course of F_2 electron concentration and N.H.L. intensity during the winter months. Moreover, the midnight intensity-maximum of the green auroral line is explained in a simple manner: there is no need to postulate some radiation from world space as an additional source of ionisation" [*cf.* Hechtel, end of 944 of April].

Beckmann has already suggested that critical frequency measurements on the F_2 layer have a certain unreliability, but he attributes this to an increase in attenuation due to a long transit through a region of zero refractive index, producing a lowering of group velocity. For this to occur, however, a very slight gradient must be assumed in the layer; but on those magnetically quiet winter days which occur some time after a magnetic disturbance, when the F_2 layer is homogeneous and has just such a slight gradient, this attenuation increase is completely absent and indeed the highest critical frequencies are measured. From everything that has been said above, an attenuation reversal demands a steep gradient: the essential thing is an increase of collision-number or of the product of collision-number and frequency.

The writer concludes by stressing the importance of continued observations on the light of the night sky, with simultaneous observations of the invasion layers: stations should be further North than hitherto, preferably at 55°–60°. "Since, in high latitudes, a strong emission from the night sky of the green auroral line is occasionally observed (Harang) even without the appearance of aurora, it is possible that this light may be excited during the recombination of strong electron concentrations in the F_2 layer or by the action of the invasion layers on the F region below them. This question can only be answered by increased observations at suitable situations."

2276. Earth's Magnetic Field and Actual Heights in Ionosphere [Huancayo Critical-Frequency Records of Ordinary & Extraordinary Components give Mean Hourly Values of Precession Frequency (from $f_H = (f_x^2 - f_o^2)/f_x$) and thus of Field Intensity at Height of Max. Ion Density (from $H = (f_H)2\pi mc/e$): regarding Earth as Uniformly Magnetised Sphere, These Results yield Curve of Diurnal Variation of Height of Max. Electron Density (Fig. 4): Possibilities of the Technique].—H. W. Wells. (*Terr. Mag. & Atmos. Elec.*, March 1942, Vol. 47, No. 1, pp. 75–79.)

2277. Simultaneous Disturbances in the Sun, in Terrestrial Magnetism, and in the Ionosphere.—M. Waldmeier. (*Naturwiss.*, 24th April 1942, Vol. 30, No. 17/18, p. 260.)

"The chromospheric eruptions on the sun are very rich in short-wave ultra-violet radiation, predominantly Lyman-α (1216 AU), which generates the ionospheric D layer at heights between 60 and 90 km. In this layer the short [radio] waves are very strongly damped, so that short-wave reception is interrupted during an eruption. Occasionally the magnetograms also show, during large eruptions, characteristic though small disturbances. The vector of such a disturbance agrees in direction with that of the diurnal variation (McNish, 10 of 1938). This effect has repeatedly been recorded at tropical stations during the recent years of high solar activity. In our own latitudes, on the other hand, it is only seldom observed; since the classical case of 1st Sept. 1859 (Bartels, 16 of 1938) only two further examples have been reported. It may therefore be of interest to call attention to a new observation of this effect, on 17th Sept. 1941.

"Fig. 1 shows at the top the behaviour of short-wave reception; this was suddenly interrupted at 8.27 U.T. Not until 9.00 did it reappear, little by

little [Vilbig: the diagram shows complete restoration a little before 10.00]. On all three magnetic curves a disturbance set in at 8.27, reaching its maximum at 8.37 and ending at about 8.45. The vertical intensity increased by 7γ, the horizontal decreased by 24γ, and the westerly declination increased by 6 minutes." Only the final phase of the eruption itself was observed in Zurich, but the representation of its complete course (bottom line of the figure) is based on many previous experiences that fade-out and eruption begin in the same minute and that big eruptions reach their maximum in about 10 minutes. At 9.00 it was classified as "of very great intensity," so that at its maximum it must have been of quite unusual brightness and size.

Finally, "the eruption, which was near the centre of the sun's disc, is to be regarded as the source of an intense corpuscular radiation reaching the earth $20^h\ 29^m$ after the beginning of the eruption and causing, on 18th/19th September, a great magnetic storm accompanied by extensive auroral phenomena."

2278. THE CORPUSCULAR GEOMAGNETIC INDEX AND RELATED SOLAR CHANGES [Analysis of K & K_A Values for 1938/41 and Comparison with Sunspot Numbers: Reason for Varying Intervals between K Maxima: etc.].—H. H. Clayton. (*Terr. Mag. & Atmos. Elec.*, March 1942, Vol. 47, No. 1, pp. 15–20.)

"The $2K$-values rise from near a minimum to a maximum value in one day and rarely last more than a day or two, indicating that the electrified particles come from a limited area on the Sun's surface and reach the Earth in the average about 1.3 days after an increase in solar activity. These findings agree closely with those outlined by me and in a separate article by Dr. Stetson on the study of auroras [2162 of 1940]." For a criticism of Clayton's use of K-indices below 4 *see* Editorial footnote on p. 17.

2279. COSMIC RAYS AND MAGNETIC STORMS [Day-to-Day Changes in Cosmic Rays well correlated with Variations in Height of Atmospheric Layer of Given Pressure at which Mesons are supposed to be formed (*cf.* 1027 of 1941): Study of Relations between Cosmic-Ray Intensity & Magnetic Storms, when This ("Temperature") Effect is eliminated: Remarkable Changes (nearly 12%) during Storm of 1st March 1941: No Simple Proportionality].—A. Duperier. (*Nature*, 23rd May 1942, Vol. 149, pp. 579–580.)

2280. ON THE POSITIVE EXCESS OF THE COSMIC RADIATION [Simple Method of Study: Establishment of Excess of Order of 20%]. G. Bernardini & others. (*La Ricerca Scient.*, Dec. 1941, Vol. 12, No. 12, pp. 1227–1243.) A short note was dealt with in 646 of March.

2281. "DISCUSSION OF AURORA OBSERVATIONS, APRIL-SEPTEMBER 1940" [at Little America: Book Review].—M. A. Wiener. (*Terr. Mag. & Atmos. Elec.*, March 1942, Vol. 47, No. 1, pp. 79–80.)

2282. AURORAS OBSERVED AT THE BLUE HILL OBSERVATORY, 1885–1940 [Data forming Basis of Papers dealt with in 2159 & 2162 of 1940].—H. T. Stetson & C. F. Brooks. (*Terr. Mag. & Atmos. Elec.*, March 1942, Vol. 47, No. 1, pp. 21–29.)

2283. REMARKABLE TYPES OF AURORA BOREALIS OBSERVED IN SOUTHERN NORWAY [Homogeneous Arcs at about Double the Usual Heights, with Red Rays of Oxygen & Nitrogen particularly Intense: Isolated Pulsating Arcs: Rays in the Sun-Lit Zone (sometimes to over 1000 km): Diffuse Red Spots (particularly during Maxima of Solar Activity): etc.].—C. Störmer. (*Comptes Rendus* [Paris], 1st Dec. 1941, Vol. 213, No. 22, pp. 803–805.) *Cf.* Dufay & Mao-Lin, 1890 of July.

2284. DISTURBANCES IN THE ATMOSPHERES OF THE EARTH AND OF MARS [Connection between Cyclones & Solar Phenomena supported by New Observations suggesting that Disturbances in Martian & Terrestrial Atmospheres are Simultaneous].—P. Bernard. (*Comptes Rendus* [Paris], 29th Dec. 1941, Vol. 213, No. 26, pp. 980–982.) For comments by Maurain *see* p. 983.

2285. THE SOLAR CORONA [and the Problem of the Processes producing the Highly Stripped Atoms (Edlén, 2348 of 1941): Theory based on Nuclear Reaction (Analogous to Uranium Fission) inside Reversing Layer].—M. N. Saha. (*Nature*, 9th May 1942, Vol. 149, pp. 524–525.)

2286. THE BRIGHT RAYS OF THE SOLAR CORONA AND THE STARK EFFECT IN HELIUM [New Hypothesis].—J. Gauzit. (*Comptes Rendus* [Paris], 1st Dec. 1941, Vol. 213, No. 22, pp. 770–772.)

Edlén's hypothesis (2348 of 1941 and 2285, above) would involve a serious modification of our ideas about the corona: Rosenthal's explanation of the rays by the spectrum of doubly-excited helium, developed further by Goudsmit & Wu (references "3" and "4"), is open to more than one objection. The present writer, assuming the origin of the rays to be helium but rejecting the double-excitation mechanism, has found another explanation: the Stark effect. Unluckily this hypothesis cannot be confirmed by an exact calculation of wavelengths, since our knowledge about the Stark effect for intense fields is insufficient; but Foster's perturbation-theory calculations of the transformation of the helium spectrum in an electric field give support to the hypothesis if a field of the order of 10^7 volts/cm can be assumed. "It cannot be a question of a constant field, which would produce a separation of ions and electrons, probable constituents of the corona; or of an ordinary inter-atomic field, which would be very weak. But it can be shown that, as a consequence of the inertia of the Stark effect, the inter-atomic field becomes very high if the electrons or the ions are displaced along parallel trajectories."

2287. MOVEMENTS OF HYDROGEN FLOCCULI [Investigations on Surges near Sunspots and Quasi-Eruptive Flocculi in Vicinity of Chromospheric Eruptions].—M. A. Ellison. (*Nature*, 6th June 1942, Vol. 149, p. 642: summary only.)

2288. ON THE FORMATION OF NITROGEN PEROXIDE DURING THE THERMAL DESTRUCTION OF OZONE IN THE PRESENCE OF NITROGEN.—D. Barbier & D. Chalonge. (*Comptes Rendus* [Paris], 29th Dec. 1941, Vol. 213, No. 26, pp. 1010–1012.)

In a previous Note (17 of January) the light accompanying the thermal destruction of ozone has been attributed to the excitation of nitrogen peroxide produced during that process. In the measurements of the absorption coefficients of ozone reported in a later note (1886 of July) an anomaly was found when the ozone was raised to sufficiently high temperatures, which seems explicable on the same hypothesis. This is confirmed by laboratory experiments. It seems likely that analogous phenomena occur in the upper atmosphere, for temperatures of at least + 30°C are supposed to exist at about 50 km, where traces of ozone should exist. Spectroscopic results by other workers have already suggested the presence of the peroxide.

2289. FURTHER STUDIES ON ACTIVE NITROGEN: III AND IV.—Rayleigh. (*Proc. Roy. Soc.*, Ser. A, 5th June 1942, Vol. 180, No. 981, pp. 123–139 & 140–150.)

Part IV deals with the ionisation associated with active nitrogen (including the result of adding inert nitrogen) and ends: "The ionisation process and the afterglow process are thus considered in some measure independent. Nevertheless, the ionisation effect has an important bearing on the question of the energy of active nitrogen. The ionisation potential of the nitrogen molecule is 15.51 v, and unless some process of multiple excitation is involved, the active centres which are in collision with nitrogen molecules must have this amount of energy, or something very near it, in order to produce ionisation. This is much greater than the energy of 9.6 v attributed to active nitrogen on spectrographic grounds (Saha & Mathur 1936). It seems to me that those who have discussed the active nitrogen problem mainly from the spectroscopic point of view have ignored the ionisation phenomena too much . . ."

2290. EVIDENCE FOR ACTIVE NITROGEN IN A POINT-O-LITE LAMP [Results with Bearing on Theories of Active Nitrogen, to be discussed Elsewhere].—N. R. Tawde & V. D. Desai. (*Sci. & Culture* [Calcutta], Nov. 1941, Vol. 7, No. 5, p. 270.)

2291. THE POSITION OF THE $3p^1D$ TERM IN O III [New Observations lead to Revised Identification which reduces Previous Discrepancy with respect to C I and N II].—B. Edlén. (*Naturwiss.*, 8th May 1942, Vol. 30, No. 19, p. 279.)

2292. SOME DIFFUSION PROBLEMS [Rigorous Form of Diffusion Equation, and Expressions for Diffusion Constant, Diffusion "Length," Direction Distribution, & Albedo in Absorbing Media].—W. Bothe. (*Zeitschr. f. Phys.*, No. 7/8, Vol. 118, 1941, pp. 401–408.)

2293. THE FREQUENCY SPECTRUM [and the Present Confusion of Terminology: Suggestion that All Frequencies be expressed by Number between 1 & 10 multiplied by a Power of Ten, and classed in Bands called by that Power].—B. C. Fleming-Williams. (*Wireless Engineer*, May 1942, Vol. 19, No. 224, pp. 200–201.) Thus a mains frequency is in band 1, a television carrier in band 7, and a light frequency in band 14. For an Editorial note *see* p. 194, and for a comment by Sayers *see* July issue, p. 309.

2294. THE CONDENSATION OF WATER VAPOUR IN THE ATMOSPHERE [including an Investigation of the Amount of Chlorides in Air & Rainwater].—G. Aliverti. (*La Ricerca Scient.*, Dec. 1941, Vol. 12, No. 12, pp. 1251–1260.) The writer finds the Cl content for air to be 0.016 mg/m³, about one-fourteenth of Jacobs' estimate.

2295. PHOTOTUBES IN METEOROLOGY [Summary of Article "The False Horizon" describing Researches on Relationships between Haze and Relative Humidity, Nuclei Density, Time of Day, etc.].—V. Finch. (*Electronics*, Nov. 1941, Vol. 14, No. 11, pp. 96, 97.)

2296. TRANSPARENCY OF GROUND GLASS [Measurements compared with Theoretical Curve based on Assumption that Surface consists of Very Large Number of Plane Surfaces oriented at Random].—A. G. Chowdri. (*Sci. & Culture* [Calcutta], Aug. 1941, Vol. 7, No. 2, p. 118.)

2297. THE RADIATION RESISTANCE OF A LINE CARRYING STANDING AND TRAVELLING WAVES.—Drabkin. (*See* 2367.)

2298. THE SKIN EFFECT AND THE DEPTH OF PENETRATION [including Chart: Equations for A.C. Resistance of Parallel-Wire Transmission Lines: the "Incremental Inductance Rule": etc.].—H. A. Wheeler. (*Electronics*, Dec. 1941, Vol. 14, No. 12, pp. 32–33: summary only.)

2299. CORRECTIONS TO "THE SKIN EFFECT IN CYLINDRICAL CONDUCTORS, ESPECIALLY OF ELLIPTIC CROSS SECTION."—J. Fischer. (*Physik. Zeitschr.*, 15th Dec. 1941, Vol. 42, No. 23/24, p. 419.) *See* 621 of March.

2300. SURGE PROPAGATION: III.—T. F. Wall. (*Engineering*, 22nd May 1942, Vol. 153, pp. 401–403: to be contd.) For Parts I & II *see* 1903 of July.

ATMOSPHERICS AND ATMOSPHERIC ELECTRICITY

2301. DIRECTIONAL CHARACTERISTICS OF TROPICAL STORM STATIC [particularly during the Storm of Aug. 1939, whose Centre passed 100 Miles from Recording Station].—S. P. Sashoff & W. K. Roberts. (*Proc. I.R.E.*, March 1942, Vol. 30, No. 3, pp. 131–133.) A summary was dealt with in 2913 of 1940.

2302. ELECTRICITY OF CLOUD AND RAIN.—J. A. Chalmers: G. C. Simpson. (*Nature*, 13th June 1942, Vol. 149, pp. 659–661.) Survey prompted by Simpson's presidential address.

2303. PROTECTION FROM LIGHTNING [including the Desirability of Allowance for This in Building-Reconstruction Designs after the War].—W. S. Sholl. (*Electrician*, 29th May 1942, Vol. 128, pp. 532–534.)

2304. SURGE PROPAGATION: III—T. F. Wall. (*Engineering*, 22nd May 1942, Vol. 153, pp. 401–403: to be contd.) For Parts I & II *see* 1903 of July.

2305. A COSMIC-RAY RADIOSONDE [also transmitting Barometric Information: Voltage Supply for Counters by Buzzer & Transformer (2090 of 1941): Total Weight 3300 gms.]—H. V. Neher & W. H. Pickering. (*Review Scient. Instr.*, April 1942, Vol. 13, No. 4, pp. 143–147.)

PROPERTIES OF CIRCUITS

2306. THE ELECTRICAL FUNDAMENTAL OSCILLATION OF THE CYLINDRICAL TWO-LAYER CAVITY.—F. Borgnis. (*Hochf:tech. u. Elek: akus.*, Jan. 1942, Vol. 59, No. 1, pp. 22–26.)

The outer coating is taken as a tube of infinitely conductive metal, enclosing a hollow cylinder of dielectric constant ϵ_2 and radius R, which itself encloses a coaxial solid cylinder of dielectric constant ϵ_1, and radius ρ: the cylinders are all of circular cross-section. In addition to its general interest, this problem is of special importance in connection with the author's method of measuring dielectric constants, at centimetric-wave frequencies, by the use of cavity resonators (3435 of 1941).

The oscillation régime holding for the fundamental electric oscillation in an empty or homogeneously filled cavity also occurs in the two-layer cavity: the electric field-strength shows only an axial component $E_z(r)$ and the magnetic field-strength only a circular component $H_\phi(r)$: *see* Borgnis, 3874 of 1939, 905 of 1940, & 50 of 1941. The boundary conditions at the surface of demarcation between the two media demand a continuous course of E_z and H_ϕ: at the outer metallic limit the tangential field-strength E_z must disappear. Section II deals with the general solution, and on the assumption of equal magnetic permeabilities for the two media the transcendental eqn. 12 is obtained for the value of y ($=k_2\rho$, where k-values represent the angular-frequency number $2\pi/\lambda$), with $a = k_1/k_2 = \sqrt{\epsilon_1/\epsilon_2}$ and $x = \rho/R$ as parameters. From y the natural wavelength of the cavity is obtained directly.

Two cases are distinguished: (i) where $a > 1$, so that the dielectric with the greater d.const. is the one nearer the axis: if ϵ_2 is put equal to unity, this corresponds to the case of a central dielectric rod in an empty cavity: and (ii) where $a < 1$, so that the dielectric with the greater d.const. is next to the metallic boundary: if ϵ_1 is put equal to unity, this gives the case where a cavity filled with dielectric ϵ_2 has a central orifice. The determination of the roots y of eqn. 12, or rather (since the fundamental oscillation is being considered) the smallest root y, as a function of a and x is carried out graphically, and represented in Fig. 2, where x is treated as a parameter and a is plotted along the horizontal axis. The wavelength in the medium ϵ_2 is then given by $\lambda_2/R = 2\pi x/y$, from which the cavity wavelength expressed as a wavelength in air is obtained by $\lambda_0 = \lambda_2\sqrt{\epsilon_2}$.

Section III considers the case where $a > 1$, and Section IV the case where $a < 1$: Figs. 3 and 7, respectively, show the air-wavelengths as functions of the radius-ratio ρ/R (with R constant) for various values of a^2. Assuming that $a = 3$, Figs. 4 to 6 give the course of E_z and H_ϕ as functions of the ratio r/R (r being the varying distance from the axis) for a ρ/R ratio of 0.25, 0.10, and 0.05 respectively: the corresponding curves for a homogeneously filled cavity are shown in broken lines. Assuming that $a = 1/3$, Fig. 8 shows the same for the case where $\rho/R = 0.25$.

Section V deals with the practically important question of the relation between the frequency change and the ratio of the dielectric constants, when the ratio ρ/R is small, as it would be when a thin cylindrical rod ($\epsilon_1 > 1$, to be measured) introduced centrally into an empty cavity ($\epsilon_2 = 1$): the treatment leads to the final result that $\epsilon_1 - 1 = 0.538\,(R/\rho)^2\Delta\lambda/\lambda$. This same equation is obtained in Section VI in a simpler way from considerations of the energy change produced by the introduction of the thin rod.

2307. A MORE SYMMETRICAL FOURIER-ANALYSIS APPLIED TO TRANSMISSION PROBLEMS.—Hartley. (*See* 2408.)

2308. PHASE-SHIFTING UP TO 360 DEGREES.—Everest. (*See* 2439.)

2309. A THREE-PHASE BRIDGE [making Use of the 60° Phase Displacement from Power Mains].—Kapp. (*See* 2438.)

2310. EDDY-CURRENT TUNING.—Eaglesfield. (*See* 2348.)

2311. COMPENSATION OF UNWANTED CAPACITANCES IN WIDE-BAND AMPLIFIERS [by "Valve-as-Condenser" Method].—Wald. (*See* 2419.)

2312. THE RELAXATION AMPLIFIER [derived from Multivibrator Circuit by Introduction of Suitably Biased Diode in Feedback Lead].—Wald. (*See* 2351.)

2313. VOLTAGE GAIN OF LOW-FREQUENCY AMPLIFIERS WITH NEGATIVE RESISTANCE [Voltage Attenuation between Stages of R–C Amplifier (resulting in Practical Over-All Gain appreciably Smaller than Calculated Value) reduced to Minimum by Negative Resistance in Grid Circuit: Analysis confirmed by Trial, using Dynatron].—S. S. Banerjee & A. S. Rao. (*Sci. & Culture* [Calcutta], May 1941, Vol. 6, No. 11, pp. 670–671.)

2314. SENSITIVE DIRECT-CURRENT AMPLIFIER WITH A.C. OPERATION [particularly for Strain-Measurements, Action Currents, etc: Flat Frequency Response up to at least 12 kc/s: Cathode-Control Amplifier eliminates Drift: Gaseous-Discharge Coupling Valves permit Use of Single 250 V Plate Supply: etc.].—S. E. Miller. (*Electronics*, Nov. 1941, Vol. 14, No. 11, pp. 27–31 and 105..109.)

2315. POWER-AMPLIFIER PLATE TANK CIRCUITS [Equations for Design Calculations, primarily for A.M. Amplifiers for Broadcasting].—A. B. Newhouse. (*Electronics*, Nov. 1941, Vol. 14, No. 11, pp. 32–35.)

2316. PRINCIPLES OF DESIGN OF SMOOTHING CHOKES.—Carter & Richards. (*See* 2514.)

2317. CALCULATION OF THE CAPACITIVE INITIAL-POTENTIAL DISTRIBUTION IN THE INTERIOR OF A TRANSFORMER WINDING ON THE ARRIVAL OF A SQUARE-WAVE SURGE [and Its Simplification by the Use of "Electrical Models."].—P. Waldvogel. (*Bull. Assoc. suisse des Élec.*, 11th Feb. 1942, Vol. 33, No. 3, pp. 57–68.)

2318. IMPEDANCE-MATCHING NETWORKS FOR UNLOADED CABLE [for Duplex Telephone Circuits: Simple Design Method].—D. G. Tucker. (*P.O. Elec. Eng. Journ.*, Jan. 1942, Vol. 34, Part 4, pp. 187–189.)

2319. MATCHED VOLTAGE-DIVIDER (OHMIC MATCHING SECTION).—E. de Gruyter. (*Bull. Assoc. suisse des Élec.*, 11th Feb. 1942, Vol. 33, No. 3, pp. 76–78.)

Author's summary:—"It is often desirable to match a voltage-divider on both sides, whether in amplifier circuits or in measuring circuits, when attenuations or time constants require to be maintained at a given value. The present paper gives a general method for the calculation of the matching section: all the important values are collected in the form of equations, tables, and curves."

2320. ATTENUATOR DESIGN: FORMULAS FOR CALCULATING RESISTANCE NETWORKS [T, H, Pi, O, Balanced H, O, & U, Bridged T, Bridged H, & Bridged-Balanced H].—D. Espy. (*Electronics*, Nov. 1941, Vol. 14, No. 11, pp. 51–54.)

2321. "THE HIGH-FREQUENCY PROPERTIES OF VARIOUS FORMS OF WIRE SPECIMENS" [E.R.A. Report Ref. M/T69: Reply to Review Criticisms].—G. G. Sutton. (*Wireless Engineer*, Dec. 1941, Vol. 18, No. 219, pp. 496–497.) For a different review of this Report *see* 1622 of 1941.

2322. CORRECTIONS TO "THE SKIN EFFECT IN CYLINDRICAL CONDUCTORS, ESPECIALLY OF ELLIPTIC CROSS SECTION."—J. Fischer. (*Physik. Zeitschr.*, 15th Dec. 1941, Vol. 42, No. 23/24, p. 419.) *See* 621 of March.

TRANSMISSION

2323. ON UNDAMPED MILLIMETRIC WAVES [and Their Generation & Reception: a Short Survey].—H. H. Klinger. (*Funktech. Monatshefte*, Feb. 1942, No. 2, pp. 23–25.)

Up to the present no way has been found of filling up the "intensity gap" discussed by Klumb (2542 of 1940): whether spark oscillators, retarding-field valves, or magnetrons are used, measurements always indicate that in this part of the wave-spectrum the intensities decrease with something like the fifth power of the wavelength. It should at least be possible to improve things so that the rule became the fourth-power law which holds for the atomic radiator. The writer points out that all the valves hitherto employed have worked on extremely small emission currents, a fact which not only prevents the attainment of large intensities but also increases the difficulty of matching the electron mechanism with the tiny resonance circuit. He has already suggested that the electrons should be injected in a beam from outside the magnetron system (reference "8"), and Kalinin & Kulkin seem to have done something of the kind in a magnetron for decimetric waves (*Elektrosvyaz*, No. 7, 1940, p. 64 onwards). He also urges that Todesco's little known experimental results (*see* 1932 Abstracts, pp. 216 & 454, and 1288 of 1937), in passing an 18 cm wave through the anode/filament space of a magnetron and obtaining a "magneto-resonance effect," should be applied to the generation of millimetric waves. It is easy enough to generate a 1–4 mm damped wave with a spark oscillator, and this could be radiated through the anode of a small magnetron: it may well be that in this way the required oscillation in the latter could be picked out and reinforced. Various efforts to obtain strong radiation in the long infra-red region are mentioned: the mercury-vapour lamp gives an almost continuous spectrum from 0.02 cm to 0.05 cm, but since the particular molecule whose excitation is essential occurs only in a definite pressure-region, no modification of lamp design has yet succeeded in increasing the long-wave output to any great extent.

As for reception, the writer is not hopeful for valve methods, even with the magnetron: he pins his faith to the silicon-tungsten detector circuit with its sensitivity increased by damping-reduction supplied by a radiation-coupling of the receiving dipole to a magnetron dipole. A final paragraph discusses the propagation possibilities of millimetric waves. Stratton's formula for the weakening by water and mist drops indicates the difficulties, to which must be added diffraction losses. But if receivers with i.f. amplification and automatic fading control (such as Esau and his colleagues built for centimetric waves) could be devised, the millimetric waves could still be useful for certain ranges.

2324. A METHOD OF GENERATING ELECTRIC WAVES [Space between Oscillating Quartz Plate and Its Upper Electrode (formed of Thinner Quartz Plate with Metal Coating on Upper Side) contains Heap of Quartz Powder set into Very Rapid Motion by the Vibrations and generating Oscillations of Very High Frequency, for Direct Radiation or for leading-off from Electrodes].—H. Muth & H. Roosenstein. (*Hochf:tech. u. Elek:akus.*, Jan. 1942, Vol. 59, No. 1, p. 30.) Telefunken Patent, DRP 706 799.

2325. SUGGESTED METHOD OF REDUCING THE GRID LOADING OF A VALVE GENERATING RETARDING-FIELD. [Barkhausen-Kurz] OSCILLATIONS.—H. H. Klinger. (*Funktech. Monatshefte*, Dec. 1941, No. 12, p. 190.)

The entire d.c. power in a retarding-field valve is taken by the grid, which must be particularly

strongly constructed for the purpose. But when it is a question of generating the shortest possible waves at the highest possible intensity, the grid wires have to be made finer, with the result that they are easily burned out when the emission current is too large. The writer suggests a method of reducing the grid load. A valve suitable for retarding-field working is connected in an ordinary regenerative circuit so that it generates "long" waves, the supply voltages being taken to the electrodes in the usual manner (Fig. 1: h.t. positive to anode). The a.c. resistance of the anode oscillatory circuit is adjusted so that the valve is working in the over-voltage condition: then the electrons can no longer fly to the anode but reverse, at those instants when the anode potential passes through zero, and fly to the anti-phase oscillating grid, at that moment just going positive. This involves a swinging of electrons round the grid, which can be made use of to generate micro-wave oscillations by the "electron dance" mechanism. By means of a resonance system between grid and anode, shown in the figure as a Lecher system but preferably taking the form, in practice, of a cavity resonator, the "electron dance" can be tuned-in and an optimum output obtained. In this way the grid takes the full d.c. power only for part of the time, and can cool down during the half-period when the current is flowing to the anode. To avoid frequency variations, conditions are adjusted so that the micro-wave oscillations are only generated when the negative half-wave of the anode alternating voltage reaches its negative maximum. The resulting micro-waves are modulated with the frequency of the "long" waves, which enables them to be received with the use of i.f. amplification—an important advantage. The small choke *D* must be so chosen that it chokes only the micro-waves, while the condenser *C* must not act as a short circuit to the "long" waves.

2326. ARRANGEMENTS FOR GENERATING SINGLE-FREQUENCY ULTRA-SHORT WAVES IN RETARDING-FIELD VALVES [Special Valve Design].—J. Pintsch Company. (*Hochf:tech. u. Elek:akus.*, Jan. 1942, Vol. 59, No. 1, p. 30: p. 30.) DRP 706 889 & 707 178, applied for in 1933.

2327. SPECIAL ARRANGEMENT FOR ULTRA-SHORT-WAVE GENERATION OR RECEPTION BY THE "ULTRA-AUDION" THREE-POINT CIRCUIT [Valve & Circuit mounted in Aperture in Metal Sheet representing Earth: Revolving Arm gives Adjustable Retroaction, Connections reduced to Minimum Length].—H. E. Hollmann. (*Funktech. Monatshefte*, Dec. 1941, No. 12, p. 192.) Telefunken Patent, DRP 652 031.

2328. THEORY OF SHORT-WAVE OSCILLATIONS WITH THE MAGNETRON [Short Account of Writer's Papers on Space Charges in Magnetic Field & on Magnetron Theory, in *Quarterly Journal of Mathematics* (1936/8), and a Note on the Tilt of a Split-Anode Magnetron (Confirmation of Terman's Theory, and the Effect of Scattering of Electrons by Near Approach: etc.]).—F. B. Pidduck. (*Wireless Engineer*, Oct. 1941, Vol. 18, No. 217, pp. 404–405.)

2329. GENERATION AND DETECTION OF FREQUENCY-MODULATED WAVES [Part I—Description of a Linear F.M. Monitor Detector introducing Less than 0.1% Distortion and used in Development of: Part II—Low-Distortion F.M. Generator, using Phase Modulator based on Special Characteristic of Parallel Tuned Circuit operated at $1/\sqrt{2}$ Times Its Resonant Frequency (W. Van B. Roberts, 1936)].—S. W. Seeley, C. N. Kimball, & A. A. Barco. (*R.C.A. Review*, Jan. 1942, Vol. 6, No. 3, pp. 269–286.)

2330. SUPPLEMENT TO "A STABILISED FREQUENCY-MODULATION SYSTEM" [Behaviour of Distortion-Correction System to a Complex Modulation].—R. J. Pieracci. (*Proc. I.R.E.*, March 1942, Vol. 30, No. 3, p. 151.) *See* 1644 of June.

2331. "DOT" FREQUENCY AND BAND WIDTH [Data for Modulated & Unmodulated Telegraphy, Siemens-Hell Telegraphy, Baudot System, Phototelegraphy & Television].—G. Brunn. (*Funktech. Monatshefte*, Feb. 1942, No. 2, pp. 26–27.)

2332. NEW IDEAS ON SEMI-AUTOMATIC KEYERS: A SYMPOSIUM OF RECENT DESIGNS FOR AUTOMATIC DOTS AND DASHES.—(*QST*, March 1942, Vol. 26, No. 3, pp. 34–38.)

2333. POWER-AMPLIFIER PLATE TANK CIRCUITS.—Newhouse. (*See* 2315.)

2334. A NEW 30-KILOWATT SHORT-WAVE RADIO TRANSMITTING EQUIPMENT FOR SOUTH AMERICA [with Electronic Keying with Weight Control, Modulated C.W. Telegraphy by Phase Modulation, Lange Neutralising Circuits (Unsymmetrical Bridged-*T* Network), Six-Strand-Filament Valve, Vacuum Condensers].—F. D. Webster & R. E. Downing. (*Elec. Communication*, No. 3, Vol. 20, 1942, pp. 217–228.)

RECEPTION

2335. ON UNDAMPED MILLIMETRIC WAVES [and Their Generation & Reception].—Klinger. (*See* 2323.)

2336. AN ANALYSIS OF THE SIGNAL-TO-NOISE RATIO OF ULTRA-HIGH-FREQUENCY RECEIVERS.—E. W. Herold. (*R.C.A. Review*, Jan. 1942, Vol. 6, No. 3, pp. 302–331.) A summary was dealt with in 1655 of June.

2337. THE ABSOLUTE SENSITIVITY OF RADIO RECEIVERS [and the Properties of Receiving Aerials: Study of Random Noise].—D. O. North. (*R.C.A. Review*, Jan. 1942, Vol. 6, No. 3, pp. 332–343.) A summary was dealt with in 1656 of June.

2338. THE DEVELOPMENT OF A FREQUENCY-MODULATED POLICE RECEIVER FOR ULTRA-HIGH-FREQUENCY USE [30–40 Mc/s Band, Channel-Width restricted to 40 kc/s: Double-

Superheterodyne Circuit with A.T.C. on Second Oscillator: Direct Comparison with Modern & Similar Amplitude-Modulated Receiver in Car without Interference Suppression, and in Stationary Set-Up].—H. E. Thomas. (*R.C.A. Review*, Oct. 1941, Vol. 6, No. 2, pp. 222–233.)

2339. RECENT DEVELOPMENTS IN FREQUENCY-MODULATION RECEIVER DESIGN [and the Use of a Double-Conversion Superheterodyne with One Oscillator only: Advantages].—P. G. Caldwell. (*Proc. I.R.E.*, May 1941, Vol. 29, No. 5, p. 287: summary only.)

2340. RECEIVER FOR FREQUENCY- OR PHASE-MODULATED SIGNALS [Elimination of Unwanted Amplitude Modulation by an Opposed-Phase Method].—W. Schönfeld. (*Hochf:tech. u. Elek:akus.*, Jan. 1942, Vol. 59, No. 1, p. 31.) Telefunken Patent, DRP 707 086.

2341. GENERATION AND DETECTION OF FREQUENCY-MODULATED WAVES.—Seeley & others. (*See* 2329.)

2342. FREQUENCY-MODULATION SIGNAL-GENERATOR DESIGN [for testing F.M. Equipment].—Franks. (*See* 2432.)

2343. ON THE CALCULATION OF THE SELECTIVITY OF RECEIVING APPARATUS [Single Stages: Multi-Stage Combinations: Band Filters: Complete Receiver with Aerial].—F. Benz. (*Funktech. Monatshefte*, Nov. 1941, No. 11, pp. 163–167.)

2344. HOMODYNE RECEPTION WITH INCREASED MODULATION-FREQUENCY BAND WITHOUT DECREASED SELECTIVITY, BY USE OF DETECTOR WITH SPECIAL CHARACTERISTIC.—H. Oltze. (*Hochf:tech. u. Elek:akus.*, Jan. 1942, Vol. 59, No. 1, pp. 30–31.) DRP 706 233. For a recent article on homodyne reception *see* 1951 of July.

2345. ELIMINATION OF ADJACENT-CHANNEL INTERFERENCE BY FILTERING-OUT THE NON-INTERFERING SIDEBAND & USING IT TO COUNTERACT THE INTERFERING SIDEBAND.—W. F. Ewald & E. Franke. (*Hochf:tech. u. Elek:akus.*, Jan. 1942, Vol. 59, No. 1, p. 31.) Telefunken Patent, DRP 706 288.

2346. THE FIGHT AGAINST RADIO INTERFERENCE: *also* THE MEASUREMENT OF RADIO INTERFERENCE: *and* INTERFERENCE SUPPRESSION IN PRACTICE.—H. Harbich: K. Hagenhaus: K. Kegel. (*E.T.Z.*, 23rd April 1942, Vol. 63, No. 15/16, pp. 177–181: pp. 182–187: pp. 187–191.)

A series of papers introduced by a note from V. E. Viefhaus, of the V.D.E. (i) Historical survey national and international progress: the determination of the permissible residual interference of electrical apparatus, from statistical measurements and the international agreement regarding m in the formula $KS_s = mE$, and German statistics on effective heights of indoor and outdoor aerials, at 91 and 841 kc/s): difficulties, especially with h.t. systems above 100 kv: interference-suppression by the use of higher signal field-strengths, and its limitations (with some field-strength values in Berlin and other cities): common-wave broadcasting: etc. (ii) Earlier measuring methods, with literature references: "VDE 0876, Specifications for Interference-Measuring Apparatus" (with new upper limit of 20 Mc/s required by the War Departments). "VDE 0877, Rules for the Measurement of Radio Interference": the design of an artificial power network for testing purposes (impedance of 150 ohms satisfactory as an average of statistical measurements of h.f. values ranging from 10 to 1000 ohms: Reppisch & Schulz, 2619 of 1935): conversion of measured symmetrical and asymmetrical voltages to "interference voltages": etc. (iii) Interference-suppressing technique: h.f. chokes, condensers: series-, shunt-, and compound-wound motors: switches: built-in suppression devices: etc.

2347. F.C.C. RULING ON USE OF INDUCTION FIELD FOR REMOTE CONTROL OF RECEIVERS, ETC.—DeSoto. (In paper dealt with in 2572, below.)

2348. EDDY-CURRENT TUNING [Magnification ("Q") of Straight Circular Conductor: of Single-Layer Solenoid (including a Useful Empirical Formula for 1–20 Mc/s): of a "Slug": Frequency Ratio due to Slug: Variation of Q due to Slug (with Approx. Equations): Experimental Confirmation].—C. C. Eaglesfield. (*Wireless Engineer*, May 1942, Vol. 19, No. 224, pp. 202–209.)

2349. THE PANORAMIC RADIO SPECTROSCOPE: SIMULTANEOUS VISUAL RECEPTION OF A BAND OF FREQUENCIES [including Description & Use of Adapters for Communications Receivers, adding Panoramic Reception (Wallace, 1702 of June)].—H. G. Miller. (*QST*, March 1942, Vol. 26, No. 3, pp. 16–18 and 62, 64.) *See* also *Electronics*, Dec. 1941, Vol. 14, No. 12, pp. 36–37 and 79, 80.

2350. AN ALL-WAVE CONVERTER [for extending Range of Amateur-Band Receiver to cover All Frequencies between 67 and 17 000 kc/s].—D. H. Mix. (*QST*, April 1942, Vol. 26, No. 4, pp. 9–12 and 70.)

2351. THE RELAXATION AMPLIFIER [derived from Multivibrator Circuit by Introduction of Suitably Biased Diode in Feedback Lead: "an Amplifier of Extreme Sensitivity," for All Cases where Straight-Line Relation between Output & Input Voltages is Not Required: Circuits for C.W. Telegraphy Reception (with Further Advantage of Strong A.V.C. Action)].—M. Wald. (*Wireless Engineer*, Dec. 1941, Vol. 18, No. 219, pp. 483–491.)

2352. RECEIVER CONTROL BY TRANSMITTED SIGNAL—"ALERT" RECEIVER [Use of Sub-Audible Frequencies, superposed on Broadcast Transmission].—H. B. Deal. (*R.C.A. Review*, Oct. 1941, Vol. 6, No. 2, pp. 167–182.)

When the low-power receiver used for the control is made to embody a loudspeaker, the apparatus is known as the "alert receiver" (1213 of April) for

use in Civilian Defence: but this is only one particular application of the system.

2353. TRIODE AS SHUNTING [Smoothing] CONDENSER IN THE MAINS UNIT OF RECEIVER AND AMPLIFIER INSTALLATIONS.—M. Wald. (*Funktech. Monatshefte*, Feb. 1942, No. 2, pp. 15–17.)

The electrolytic condensers usually employed for smoothing cannot as a rule exceed a total value of about 50 μF, on account of considerations of cost. The writer's circuit (a patent has been applied for) uses a triode to produce the effect of a condenser of several hundred microfarads, giving a practically complete freedom from hum and a completely stable receiver: motor-boating is entirely eliminated. The RCA circuit for a triode acting as a condenser (Fig. 1) is unsuitable for this particular purpose, for reasons given, but the writer's modification of it (Fig. 2) yields a circuit acting as a smoothing condenser with purely capacitive internal resistance, and therefore free from these objections. In practice the valve must be protected from overmodulation, and the circuit finally employed (Fig. 4: mains unit for a superheterodyne receiver which previously displayed a serious tendency to motor-boating in the short-wave band) shows how this is done: the valve circuit is used as a third smoothing stage, following a pair of electrolytic condensers and their choking coil. *Cf.* 2419, below.

2354. MASS PRODUCTION FOR PRECISION EQUIPMENT [New Assembly Technique, including Close Spacing of Inspectors along Assembly Line: Study of Hallicrafters' Methods].—H. J. Emerson. (*Electronics*, Nov. 1941, Vol. 14, No. 11, pp. 42–45.)

2355. STATISTICAL SURVEY OF THE DEVELOPMENT OF BROADCAST RECEIVERS [1929/1940: German Data].—H. Lübeck. (*Funktech. Monatshefte*, Dec. 1941, No. 12, pp. 181–187.)

2356. THE RELATIONS BETWEEN TECHNICAL DEVELOPMENT, PRICE LEVELS, AND THE GROWTH IN THE NUMBER OF LISTENERS [Survey of German Statistics from 1927 to 1940, with Particular Attention to the Effects of the "People's Receiver" (VE) & the "Little German Receiver" (DKE): Some Empirical Rules].—H. Lübeck. (*Funktech. Monatshefte*, Jan. 1942, No. 1, pp. 3–9.)

2357. THE GERMAN AND AMERICAN BROADCAST MARKETS [German Sales (Supplement to 2356, above: including Section on Average Life of Receivers and Data on "First Sales" & "Replacement Sales"): Development of Broadcasting in U.S.A., and Comparison with That in Germany: U.S.A. Statistics: Probabilities for the Future (including an Empirical Formula for American Increase of "Listeners with at least One Receiver"): etc.].—H. Lübeck. (*Funktech. Monatshefte*, Feb. 1942, No. 2, pp. 17–22.)

2358. SYNTHETIC BASS FOR SMALL RECEIVERS, BY INTRODUCTION OF CERTAIN FORMS OF DISTORTION.—F. Shepard, Jr. (*Electronics*, Nov. 1941, Vol. 14, No. 11, p. 25: paragraph only.) *See* also Dec. issue, No. 12, pp. 31–32, and *Communications*, Nov. 1941, pp. 14 & 18.

AERIALS AND AERIAL SYSTEMS

2359. THE PRODUCTION OF A PARTICULARLY SHARP ULTRA-SHORT-WAVE BEAM BY THE COMBINATION OF TWO TRANSMITTER/RADIATOR SYSTEMS WITH DIFFERENT CHARACTERISTICS.—E. Gerhard. (*Hochf:tech. u. Elek:akus.*, Jan. 1942, Vol. 59, No. 1, p. 32.) DRP 706 661.

2360. REFLECTOR ARRANGEMENT FOR ULTRA-SHORT-WAVE RELAYING [Double Reflector with Amplifying Re-Radiator at Common Focus].—J. Pintsch Company. (*Hochf:tech. u. Elek:akus.*, Jan. 1942 Vol. 59, No. 1, p. 32.) DRP 707 253.

2361. ULTRA-HIGH-FREQUENCY ANTENNA COUPLING UNIT [giving Electronic Coupling for 4 U.H.F. Receivers operating on Different Frequencies, to Single High Aerial with Mid-Band Frequency of 37.22 Mc/s: Successfully Used to operate 152 Two-Way Police Units].—R. D. Rietzke. (*Electronics*, Nov. 1941, Vol. 14, No. 11, pp. 74, 76.)

2362. NOISE IN RECEIVING AERIALS [and the Custom of describing the External Noise-Level at a Receiving Site in terms of "Equivalent Temperature of the Radiation Resistance": Objections, and a Preferable Definition].—D. A. Bell. (*Wireless Engineer*, Oct. 1941, Vol. 18, No. 217, p. 405.)

2363. THE ABSOLUTE SENSITIVITY OF RADIO RECEIVERS [and the Properties of Receiving Aerials: Study of Random Noise].—D. O. North. (*R.C.A. Review*, Jan. 1942, Vol. 6, No. 3, pp. 332–343.) A summary was dealt with in 1656 of June.

2364. EXTENDED AERIAL SYSTEMS: CALCULATING THE POLAR DIAGRAMS [using the Sin $n(\phi/2)/n\,\mathrm{Sin}(\phi/2)$ Formula for Resultant/Sum Ratio of n Equal Vectors: Application to Broadside & End-Fire Arrays].—E. Green. (*Wireless Engineer*, May 1942, Vol. 19, No. 224, pp. 195–199.) For an Editorial *see* pp. 193–194.

2365. THE DIRECTIONAL PROPERTIES OF SPHERICAL (SOUND) RADIATORS.—Karnovski. (*See* 2391.)

2366. STUDIES IN ANTENNA RESISTANCE AND REACTANCE [Measurements by Willans' Double-Beat Method on Grounded Receiving Aerials, at 330 to 2300 kc/s].—S. R. Khastgir & C. Choudhury. (*Indian Journ. of Phys.*, Dec. 1941, Vol. 15, Part 6, pp. 437–446.)

With vertical and inverted-L aerials, the resistance increased steadily with frequency (the fundamental natural frequency, or its harmonics, did not come into the range): with the T aerial a definite minimum of resistance appeared within the range employed. The reactance was found in general to increase with increasing frequency: with the inverted-L aerial the rise was followed by a sudden decrease beginning at a certain frequency: with the T aerial the decrease occurred in the region where the minimum resistance had been observed.

With T and inverted-L aerials the resistance and reactance increased with increasing length of the horizontal parts.

2367. THE RADIATION RESISTANCE OF A LINE CARRYING STANDING AND TRAVELLING WAVES.—A. L. Drabkin. (*Journ. of Tech. Phys.* [in Russian,] No. 7, Vol. 11, 1941, pp. 635–641.)

A high-frequency transmission line of length l, consisting of two parallel lines spaced a distance d apart, is considered. The line is assumed to be loaded with a pure resistance at the far end (Fig. 1). All losses except those due to radiation are neglected. Using a method similar to that proposed by Bechmann (1931 Abstracts, pp. 325 & 556) for the case of standing waves only, equation (13) determining the radiated power is derived for the case of mixed (standing and travelling) waves. From this equation the radiation resistance can also be calculated. Particular cases of lines carrying pure standing and pure travelling waves, and also when d is small in comparison with l and λ, are discussed separately. The effect of the coefficient k of the travelling wave on the radiated power is investigated, and the optimum value of k is determined (26) for which the ratio of the radiated power to the power dissipated in the load is at a minimum.

VALVES AND THERMIONICS

2368. AN ELECTRON BEAM TUBE FOR ULTRA-HIGH FREQUENCIES: PRELIMINARY COMMUNICATION.—Yu. A. Katzman. (*Journ. of Tech. Phys.* [in Russian], No. 13, Vol. 10, 1940, p. 1137.)

A modified version of the type proposed by Hahn & Metcalf (1901 of 1939). The new tube is made of glass; the input and output circuits take the form of a coaxial resonance line and are partly mounted within the tube; the connections between the internal and external circuits are effected through thick molybdenum rods sealed into the glass (Fig. 1). The following experimental data were obtained with the first models: 6-fold voltage amplification with a beam of 10 mA, rising to 20-fold amplification with a beam of 20 mA. Still better results (not specified) have been obtained with subsequent models.

2369. THEORY OF SHORT-WAVE OSCILLATIONS WITH THE MAGNETRON.—Pidduck. (*See* 2328.)

2370. THE THEORY OF THE MAGNETRON OSCILLATOR WITH SPLIT ANODE.—A. N. Chernets. (*Journ. of Tech. Phys.* [in Russian], No. 7, Vol. 11, 1941, pp. 619–634.)

An equivalent circuit for the magnetron is shown (Fig. 1) and a differential equation (4) derived by Slutzkin (90 of 1935) for determining the operation is written down. An equation (20) is then derived for a stable state of the oscillator. It is pointed out that this equation is identical with that derived by Appleton and van der Pol (*Phil. Mag.*, 1922) for the case of a three-electrode valve, and the conclusions reached by these authors are therefore applicable also to the magnetron. The amplitude of oscillations and the conditions necessary for self-excitation and stable operation of the magnetron are discussed in detail. The static characteristics of magnetrons were investigated experimentally and an equation (53) determining these is derived. The efficiency of operation is also discussed and optimum operating conditions are established. The paper ends with a report on experiments made to verify the conclusions reached. The experiments were conducted at comparatively low frequencies, of the order of 10^5 c/s.

2371. ULTRA-HIGH-FREQUENCY POWER AMPLIFIER [GL 8010-R: Coated Cathode heated by Electron Bombardment from Auxiliary Filament: Coolers for Forced-Air Cooling: Max. Plate Dissipation 50 Watts].—(*Gen. Elec. Review*, April 1942, Vol. 45, No. 4, p. 249.)

2372. CURRENT INDUCED IN AN EXTERNAL CIRCUIT BY ELECTRONS MOVING BETWEEN TWO PLANE ELECTRODES [with Graphical Method of Determination, using "Reversed Trajectory"].—R. Kompfner. (*Wireless Engineer*, Feb. 1942, Vol. 19, No. 221, pp. 52–55.) A simpler and clearer method than that of 1355 of May. For a correction *see* March issue, No. 222, p. 100.

2373. TUBE NOISE, AND ITS ORIGIN IN THE MANUFACTURING PROCESSES.—W. L. Krahl. (*Electronics*, Dec. 1941, Vol. 14, No. 12, pp. 33–34: summary only.)

2374. ON NOISES IN SECONDARY-ELECTRON MULTIPLIERS.—P. A. Sinitsyn. (*Journ. of Tech. Phys.* [in Russian], No. 13, Vol. 10, 1940, pp. 1131–1136.)

Experiments are described with secondary-electron tubes of the type proposed by Kubetski (*see*, for example, 2583 of 1937: and *cf.* 3494 of 1940). Tubes with AgORb, AgOCs and CuSCs emitting layers were experimented with. Curve 1 is plotted (Fig. 5) showing the relationship between the output current (vertical axis) and the noise current (horizontal axis). As can be seen from the curve, this relationship is parabolic. The decrease in the noise current due to the space charge at the anode of the multiplier is illustrated by the curve in Fig. 6. The relationship between the signal noise ratio (in db) and the light flux (in lm) is given by the curve in Fig. 7. The threshold of sensitivity for different emitting layers was also investigated and the results are shown in table 1.

2375. NEW SECONDARY-ELECTRON MULTIPLIERS [Survey, including Section on Development of Secondary-Emission Surfaces up to 1941].—O. Peter. (*Funktech. Monatshefte*, Nov. 1941, No. 11, Supp. pp. 41–47.) With 40 literature and patent references.

2376. A CONFERENCE ON CATHODE PHENOMENA IN A VACUUM AND IN RAREFIED GASES.—Gorelik & Ravdel. (*See* 2424.)

2377. FORMULAS FOR THE AMPLIFICATION FACTOR FOR TRIODES [and the Derivation of a Formula, for Plane & Cylindrical Structures, when Assumption (implicit in Previous Derivations) that Grid/Anode Distance is

Large compared with Distance between Turns of Grid is Not Valid: Electrolytic-Trough Confirmation].—B. Salzberg. (*Proc. I.R.E.*, March 1942, Vol. 30, No. 3, pp. 134–138.)

2378. ANODE DISSIPATION IN ANODE-MODULATED CLASS C AMPLIFIERS [Development of Formula for Calculation of Average-Dissipation /Carrier-Dissipation for Any Given Average Modulation-Depth: the Excess of Anode Dissipation over That obtained by assuming Constant Efficiency over Audio Cycle (and the Customary "Two-Thirds" Rule for Class C Operation: there is "No Universally Correct Fraction"): Practical Conclusions].—R. G. Mitchell. (*Wireless Engineer*, Nov. 1941, Vol. 18, No. 218, pp. 443–449.)

2379. ELECTRON-PATH RECORDER: A TOOL FOR VALVE DEVELOPMENT.—G. Müller. (*Funktech. Monatshefte*, Jan. 1942, No. 1, pp. 9–11.)

Hitherto the methods employed have been the electrolytic trough and the steel-balls/rubber-membrane-device: both have their defects, and both, in particular, give only approximate results, since they neglect the effect of space charges. The writer suggests a method free from these objections. The valve-electrode system under investigation, or an enlarged model, is introduced into a cathode-ray tube, at a distance from the electron gun which is large compared with the length of the electrode system: between the system and the screen there is an electrostatic immersion lens (Fig. 3), whose focal length is varied in proportion to, and in phase with, the velocity-modulation given to the ray: in this way the sharpness of the image is maintained. The varying velocity of the electrons as they enter the electrode system near its cathode causes the ray deflection to vary also, so that a line is formed on the screen: "this line represents the path of an electron starting off from this point of the cathode, without regard to space charge": but if the cathode is actually emitting, a space charge is formed and has its effect on the electron path. If the ray is conducted slowly along the length of the cathode (this can be done by moving the electrode system by glass springs, or, more simply, by deflecting the ray before it enters the sytem) the various paths are imaged in succession. By means of a rotating commutator two processes are alternated at some frequency above 16 c/s: (i) the image of the electrode system is formed by a scanning process produced by two sinusoidal voltages, and (ii) the electron paths are obtained as described. Fig. 5 is a "sketch" only of such an image: no indication of any actual results is given.

2380. "PRINCIPLES OF ELECTRON TUBES" [with Special Attention to Industrial Applications of Valves, Photocells, & Gaseous-Discharge Tubes: Book Review].—H. J. Reich. (*Review Scient. Instr.*, April 1942, Vol. 13, No. 4, p. 165.)

2381. RECEIVER TUBE OPERATION IN AIRCRAFT [Mistaken Tendency to set Max. Life Limit of 1000 or even 500 Hours: Some Data & Deductions: a Valve once safely past First Few Hundred Hours is Better than a New One and will safely give Several Thousand Hours].—J. E. M. Lagasse & W. W. H. Dean. (*Electronics*, Nov. 1941, Vol. 14, No. 11, pp. 56 and 58, 62.)

2382. ON THE USE OF GASEOUS-DISCHARGE PLASMA AS AN ELECTRODE IN MEASURING THE CONDUCTIVITY OF DIELECTRICS AND SEMI-CONDUCTORS [with Bearing on Oxide-Coated Cathodes].—Shul'man. (*See* 2444.)

2383. THE DISTRIBUTION OF AUTELECTRONIC EMISSION FROM SINGLE-CRYSTAL METAL POINTS: II—THE ADSORPTION, MIGRATION, AND EVAPORATION OF THORIUM, BARIUM, AND SODIUM ON TUNGSTEN AND MOLYBDENUM.—M. Benjamin & R. O. Jenkins. (*Proc. Roy. Soc.*, Ser.A, 5th June 1942, Vol. 180, No. 981, pp. 225–235 and Plates.) For I *see* 101 of 1941.

2384. PROTECTION FOR ELECTRODE LEADS SEALED INTO GLASS WALLS [Electrolytic Deposition of Leak-Producing Skin prevented by "Blind" Electrodes connected to Positive Lead].—A. Gehrts. (*Funktech. Monatshefte*, Feb. 1942, No. 2, p. 27.) Telefunken Patent, DRP 667 449.

2385. "DIFFUSION IN AND THROUGH SOLIDS" [Book Review].—R. M. Barrer. (*Review Scient. Instr.*, April 1942, Vol. 13, No. 4, pp. 164–165.)

2386. DIFFUSION OF HEAT THROUGH A RECTANGULAR BAR, AND THE COOLING AND INSULATING EFFECT OF FINS: I—THE STEADY STATE.—M. Avrami & J. B. Little. (*Journ. Applied Phys.*, April 1942, Vol. 13, No. 4, pp. 255–264.) A summary was dealt with in 1977 of July.

DIRECTIONAL WIRELESS

2387. ULTRA-SHORT-WAVE TWO-NOTE BEACON WITH SINGLE RADIATING SYSTEM SWUNG TO-AND-FRO, WITH SYNCHRONOUS ALTERNATIONS OF NOTE.—E. Gossel. (*Hochf:tech. u. Elek:akus.*, Jan. 1942, Vol. 59, No. 1, p. 32.) Lorenz Patent, DRP 706 626.

2388. AN OMNIDIRECTIONAL RADIO-RANGE SYSTEM: PART II—EXPERIMENTAL APPARATUS [First (6½ Mc/s) Model, and Tests up to 1940: Later (125 Mc/s) Model: Monitoring: Indicators on Aircraft].—D. G. C. Luck. (*R.C.A. Review*, Jan. 1942, Vol. 6, No. 3, pp. 344–369.) For Part I *see* 458 of February: and *cf.* 2459, below.

2389. THE USE OF H.F. IRON CORES FOR FIELD & SEARCH COILS OF A GONIOMETER, TO AVOID ERRORS DUE TO INHOMOGENEITY OF FIELD *and* A D.F. AERIAL SYSTEM WITH FERROMAGNETIC CORES.—Lorenz Company: Telefunken. (*Hochf:tech. u. Elek:akus.*, Jan. 1942, Vol. 59, No. 1, p. 31: p. 32.) DRP 706 238: DRP 707 379.

ACOUSTICS AND AUDIO-FREQUENCIES

2390. A THERMOREGENERATED TUBE AS SOUND RECEIVER.—K. Teodorchik & K. Veleganina. (*Journ. of Tech. Phys.* [in Russian], No. 13, Vol 10, 1940, pp. 1138–1139.) A German version was dealt with in 460 of February. *See* also 1991 of July.

2391. THE DIRECTIONAL PROPERTIES OF SPHERICAL (SOUND) RADIATORS.—M. I. Karnovski. (*Journ. of Tech. Phys.* [in Russian], No. 12, Vol. 10, 1940, pp. 970–979.)

A wave equation (1), in spherical coordinates, of harmonic oscillations is written down and a general solution (3) is found determining the velocity potential u of the sound field in terms of a spherical function (Legendre polynomial). This solution also determines a sphere "deformed" in a certain manner, and the sphere is said to be of the nth order is this is the order of the corresponding spherical function. An equation (8) is also derived determining the directional characteristic of a spherical radiator of the nth order. To obtain a sharply directional characteristic it may be necessary to use a combination of spherical radiators, but while the characteristic of each radiator, as can be seen from equation (8), is independent of frequency, this does not ensure that the resultant characteristic will also be independent of frequency. If, however, certain conditions are fulfilled, a sharply directional characteristic independent of frequency within wide limits can be obtained. These conditions are established, and it is suggested that the desired results may be achieved in practice by using a system of horn loudspeakers mounted on a sphere.

2392. ON THE DIRECTIONAL CHARACTERISTIC OF A PISTON DIAPHRAGM.—M. A. Sapozhkov. (*Journ. of Tech. Phys.* [in Russian], No. 7, Vol. 11, 1941, pp. 642–644.)

A piston diaphragm in the shape of a parallelogram and oscillating in an infinite baffle plate is considered. Formulae are derived for determining projections of isobars on a plane parallel to the diaphragm. The curve so obtained for the zero-pressure isobar is similar in shape to the diaphragm, while for other pressures the curves are in the shape of an ellipse (Fig. 1).

2393. THEORY AND PRACTICE OF THE PIEZO-ELECTRIC "SOUND CELL" MICROPHONE [with Rochelle-Salt Elements].—P. Beerwald & H. Keller. (*Funktech. Monatshefte*, Dec. 1941, No. 12, pp. 187–190.)

"The unavoidable compromise between sensitivity and quality has led, in the crystal microphone, to the development of the 'diaphragm' type with comparatively high sensitivity and average quality (3187 of 1939) and the 'sound-cell' type with extremely high quality and correspondingly low sensitivity." In its best design the latter type is comparable in quality with the condenser microphone, over which it has the advantages of requiring no supply voltage, and of allowing the use of longer leads to the amplifier: and American statistics show that in two years less than 1% of all microphones of this type in use have required repair. Some outlines of design, equations for frequency characteristic, etc., and a capacitance estimate are given.

2394. DURAND HOSPITAL SIGNALLING AND COMMUNICATION EQUIPMENT [including Patients' Calling System and Radio Facilities].—W. White. (*Elec. Communication*, No. 3, Vol. 20, 1942, pp. 189–192.)

2395. AURAL PLANE DETECTOR OPERATED BY ONE MAN [Headpiece consisting of Earphones surmounted by Parabolic "Concentrator": Amplifier, etc., in Small Slung Case].—(*Journ. Roy. Aeron. Soc.*, June 1942, Vol. 46, No. 378, p. 105: abstract only.)

2396. AN ACOUSTIC SYSTEM FOR AIRCRAFT DETECTION [Simple Unit for Amateur Construction].—D. H. Mix. (*QST*, March 1942, Vol. 26, No. 3, pp. 22–24 and 68, 70.)

2397. AIR-RAID SIGNAL DEMONSTRATED [Powerful Directive Equipment with Two Petrol Motors].—Bell Laboratories. (*Bell Lab. Record*, April 1942, Vol. 20, No. 8, p. 200.)

2398. CONSTANT-GROOVE-SPEED RECORDING [4" per Sec. gives Satisfactory Recording between 200 & 4000 c/s: Recording Cost about 10 Cents per Hour on Thin Plastic 12" Disc: Permanent Cutting Needle, needing No Resharpening, embosses Groove without forming Chip: Immediate Playback].—R. Leitner. (*Proc. I.R.E.*, May 1941, Vol. 29, No. 5, p. 287: summary only.) From Frank Rieber, Inc.

2399. SILVERING OF WAX SURFACES USED FOR PREPARING GRAMOPHONE MATRICES [Improved Process now being used Commercially].—V. D. Majumdar. (*Sci. & Culture* Calcutta], Nov. 1941, Vol. 7, No. 5, pp. 270–271.)

2400. A TWO-SIDE NON-TURNOVER AUTOMATIC RECORD-CHANGER [with Reversal of Direction of Rotation for playing of Under Side].—B. R. Carson. (*R.C.A. Review*, Oct. 1941, Vol. 6, No. 2, pp. 183–189.) *Cf.* 734 of March.

2401. A CONTROLLABLE MIXING AMPLIFIER USING THE AH1 HEXODE AS INPUT VALVE [using First Control Grid for Low Frequencies (Resonance about 40 c/s) & Second for High (Resonance about 4000 c/s): a Three-Valve Amplifier for War-Time Economy].—A. Bukowiec. (*Funktech. Monatshefte*, Nov. 1941, No. 11, pp. 168–171.)

2402. N.B.C. STUDIOS 6A AND 6B [at Radio City].—G. M. Nixon. (*R.C.A. Review*, Jan. 1942, Vol. 6, No. 3, pp. 259–268.)

2403. THE OBLIQUE INCIDENCE OF SOUND ON A RESONANT ABSORBER.—K. A. Vital. (*Journ. of Tech. Phys.* [in Russian], No. 12, Vol. 10, 1940, pp. 980–987.)

This is the paper mentioned in 1415 of May. The sound absorption by a single perforated sheet is discussed when waves fall on it obliquely, and formulae (V) and (13) are derived determining respectively the input impedance and absorption coefficient of the absorber.

2404. A COMPARISON BETWEEN SUBJECTIVE AND OBJECTIVE MEASUREMENTS OF NOISE LEVELS.—V .S. Kazanski & K. P. Latyshev. (*Journ. of Tech. Phys.* [in Russian], No. 7, Vol. 11, 1941, pp. 668–673.)

A detailed experimental investigation was carried out in which various objective and subjective methods for measuring noise levels were compared. The main results obtained are as follows :—(1) Sufficient agreement was observed in measuring levels of the standard tone (1000 c/s) by the General Radio type 759-A objective noise-meter and by a system employing a calibrated electrodynamic microphone and developed by the All Union Institute of Experimental Medicine (discrepancy not exceeding 3 db). (2) Sufficient agreement was also observed between subjective measurements (average values) of noises of various types and measurements by the G.R. objective noise-meter (maximum discrepancies were 3.3, 1.25, and 4.5 phons, at levels of 41, 61, and 81 phons respectively). (3) In subjective measurements greater discrepancies were observed at lower than at higher levels (13 and 2 phons at levels of 41 and 81 phons respectively).

2405. A.C.-OPERATED POWER SUPPLY FOR SOUND-LEVEL METERS [with Use of Two Flash-Light Cells in place of Condenser in Last Stage of Filter for Filament Circuit : act as Condenser for Smoothing, with Additional Advantage of helping Voltage Stabilisation].—General Radio. (*Review Scient. Instr.*, April 1942, Vol. 13, No. 4, pp. 189–190.) Type 759-P50.

2406. SOME OBSERVATIONS CONCERNING THE TRANSIENT BEHAVIOUR OF RADIO NOISE METERS [with Discussion].—C. M. Burrill. (*Electronics*, Dec. 1941, Vol. 14, No. 12, pp. 35 and 85.)

2407. SIMPLIFICATION OF MUSICAL NOTATION [Plea for Use of "a Little Organised Common Sense," so that More can enjoy the Pleasure of Playing].—Brabazon of Tara. (*Nature*, 16th May 1942, Vol. 149, pp. 554–555.) For correspondence *see* issues for 6th & 27th June and 4th July, pp. 640, 733–734, and 25.

PHOTOTELEGRAPHY AND TELEVISION

2408. A MORE SYMMETRICAL FOURIER ANALYSIS APPLIED TO TRANSMISSION PROBLEMS.—R. V. L. Hartley. (*Proc. I.R.E.*, March 1942, Vol. 30, No. 3, pp. 144–150.)

From the author's summary :—"The Fourier identity is here expressed in a more symmetrical form which leads to certain analogies between the function of the original variable and its transform. Also it permits a function of time, for example, to be analysed into two independent sets of sinusoidal components, one of which is represented in terms of positive frequencies, and the other of negative [*cf.* Wheeler, 3297 of 1941]. The steady-state treatment of transmission problems . . . is similar to the familiar ones . . . In the transient treatment, use is made of the analogies referred to above, and their relation to the method of 'paired echoes' [Wheeler, Strecker, 3642 of 1939 and 447 of 1941] is discussed . . ."

2409. THE PHASE CYCLOMETER [primarily for Development of Television Equipment].—Mitchell & Kilvington. (*See* 2440.)

2410. THEORETICAL CONSIDERATIONS ON A NEW METHOD OF LARGE-SCREEN TELEVISION PROJECTION : PART II.—F. Fischer & H. Thiemann. (*Schweizer Arch. f. angew. Wiss. u. Tech.*, Jan. 1942, Vol. 8, No. 1, pp. 15–28.)

Conclusion of the part dealt with in 1730 of June. The result of the analysis is that the *liquid* eidophor must be very suitable for teleidoscopic projection. For corrections to the Nov. 1941 instalment *see* issue for Feb. 1942, No. 2, p. 66.

2411. DESIGN OF THE OUTPUT STAGE OF A HIGH-POWER TELEVISION TRANSMITTER [Eiffel Tower : Design Considerations & Experimental Results].—E. Labin. (*Elec. Communication*, No. 3, Vol. 20, 1942, pp. 193–201.) Taken from a 1938 *Soc. franç. des Élec.* paper.

2412. TRANSMITTING EQUIPMENT FOR TELEVISION REPORTING : II [Description of Telefunken 1937/38 Van for Outside Television Broadcasts].—H. Weber. (*Funktech. Monatshefte*, March 1942, No. 3, Supp. pp. 9–11, to be contd.) Part I was in the issue for Feb. 1942, No. 2, Supp. p. 1 onwards.

2413. A SIMPLIFIED TELEVISION SYSTEM FOR THE RADIO AMATEUR AND EXPERIMENTER [using the RCA-1847 Iconoscope (3080) of 1940) & Three-Inch Kinescope].—L. C. Waller & P. A. Richards. (*R.C.A. Review*, Oct. 1941, Vol. 6, No. 2, pp. 245–252.) For a summarised version see *Wireless World*, Jan. 1942, Vol. 48, No. 1, p. 10.

2414. ON THE PERFORMANCE OF OPTICAL INSTRUMENTS WITH COATED LENS SYSTEMS.—J. E. Tyler & others. (*Journ. Opt. Soc. Am.*, April 1942, Vol. 32, No. 4, pp. 211–213.)

2415. A NEW CHEMICAL METHOD OF REDUCING THE REFLECTANCE OF GLASS [Hydrofluoric Acid Vapour Treatment : Technique : Photographs of Some Results (including C.R. Tube Face)].—F. H. Nicoll. (*R.C.A. Review*, Jan. 1942, Vol. 6, No. 3, pp. 287–301.) *See* also 776 of March and back references.

2416. ADAPTING TELEVISION RECEIVERS TO THE NEW [F.C.C.] STANDARDS [Practical Information].—(*Electronics*, Nov. 1941, Vol. 14, No. 11, pp. 63 . . 70.)

2417. A METHOD AND EQUIPMENT FOR CHECKING TELEVISION SCANNING LINEARITY [by Superposition of "Space Pattern", from Camera under Test, on Synthetically-Produced "Time Pattern" : Results independent of Scanning Linearity of Kinescope Monitor].—V. J. Duke. (*R.C.A. Review*, Oct. 1941, Vol. 6, No. 2, pp. 190–201.)

2418. A HIGH-PERFORMANCE VIDEO-SIGNAL GENERATOR FOR TESTING CATHODE-RAY TELEVISION TUBES.—O. Schade & H. DeRyder. (*Electronics*, Dec. 1941, Vol. 14, No. 12, p. 32 : summary only.)

2419. COMPENSATION OF UNWANTED CAPACITANCES IN WIDE-BAND AMPLIFIERS [by Use of Modified "Valve-acting-as-Condenser" Principle].—M. Wald. (*Funktech. Monatshefte*, Nov. 1941, No. 11, pp. 161–163.)

The usual "valve-as-condenser" circuit, often used for a.t.c. in receivers, is seen in Fig. 2: equations 1–3. The writer modifies it by changing the phase of the feedback voltage by 180° by the interposition of a second valve or by the use of a single valve with negative slope. Then the effective internal resistance of the valve is equal, over a wide frequency range, to the impedance of a condenser with the negative capacitance $-CRS$ and the negative resistance $-1/S$: the resulting negative condenser can be employed to cancel a correspondingly large positive condenser, and if the retroaction condenser C is made variable, the negative capacitance can be varied as desired. Fig. 3 shows, as example, an aperiodic amplifier with valve- and lead-capacitances compensated in this way. The phase reversal is performed by the auxiliary triode V_1, while the pentode V_2 is the actual amplifier valve. The signal is applied to the grid of V_2, and the feedback of the anode alternating voltage to the grid of V_1 (through a blocking condenser) produces a phase-reversed voltage across the resistance R' in the anode circuit of V_1, which is transferred by the voltage divider C,R to the grid of V_2. R' is made much smaller than R, so that the working resistance of V_1 can be put equal to R': on this assumption eqn. 6 is valid, and the internal resistance of the combination is seen to be that of a series connection of a negative ohmic resistance and a negative capacitance $-CRSR'S'$. If $RSR'S'$ is made unity, the negative capacitance is equal in magnitude to the capacitance of the retroaction condenser C, which is adjustable from about 0 to 50 pF. Fig. 5 shows experimental curves taken without and with the compensating circuit in action: the result appears to be ideal, the compensated amplification being practically constant from 0 to 1000 kc/s. *Cf.* 2353, above.

2420. APPLICATION OF FREQUENCY MODULATION TO TRANSMISSION OF TELEVISION SYNCHRONISING PULSES ["Alternate Carrier Transmission"].—F. J. Bingley: A. V. Loughren. (*Electronics*, Dec. 1941, Vol 14, No. 12, pp. 87, 88.) For Loughren's original suggestion *see* 2650 of 1940.

2421. MEASUREMENT OF THE SLOPE AND DURATION OF TELEVISION SYNCHRONISING IMPULSES [F.C.C. Standards, and the Need for C.R. Tube Methods of Measurement: Inadequacy of Saw-Tooth Sweep: Sine-Wave Sweeps, Ordinary & Direct-Reading: Time-Delay, Interlace-Accuracy, and "Pulse-Cross" Measurements].—R. A. Monfort & F. J. Somers. (*R.C.A. Review*, Jan. 1942, Vol. 6, No. 3, pp. 370–389.) A summary was referred to in 1106 of April. *Cf.* 2468, below.

2422. SINGLE-STAGE GENERATORS FOR THE PRODUCTION OF HIGH-VOLTAGE SAW-TOOTH OSCILLATIONS.—E. Kinne. (*Funktech. Monatshefte*, Dec. 1941, No. 12, pp. 177–180.)

"The question whether television receivers in the future will give preference to magnetic or electrostatic deflection will be decided in favour of the latter once it is possible to generate a sufficiently high deflecting voltage in a single stage." It is this problem that the writer considers. He begins by pointing out that so far as practical results are concerned it is immaterial whether the condenser is charged slowly and quickly discharged, or *vice versa*: for economical reasons, however, it is better to charge quickly, by pulses, and discharge slowly. The well-known "blocking oscillator" circuit of Fig. 1 fulfils this requirement: it was employed in 1938, and is considered here on the basis of a 1% departure from linearity, which is taken as the maximum distortion permissible for television. A saw-tooth voltage of 200 v given by a grid bias of +900 v is shown in the oscillogram of Fig. 4: a 1000 v saw-tooth voltage would require a grid bias of +8000 v. On the other hand, the modification of the Fig. 1 circuit shown in Fig. 6 gives, for the same 1% distortion, up to 140% greater saw-tooth voltage, so that a 1000 v voltage can be obtained with a grid bias of only 3300 v.

Discussion of the discharge equation shows that the way to obtain a discharge curve linear over a wide range is to produce a number of exponential curves, each decaying at a different rate and each beginning at a different charge voltage. The circuit of Fig. 14 has a discharge curve made up by the addition and subtraction of eight different exponential curves, compared with the six of the Fig. 6 circuit.

By proper choice of component values, a 1% distortion can be obtained with this circuit, for a saw-tooth voltage of as much as 50% of the charging voltage: that is, four times the value given by ordinary time-base circuits. Fundamentally, by the use of a large number of suitable exponential curves an adequately linear discharge curve should be obtainable with a high voltage drop from peak to base: "With a positive bias of about 1000 v, saw-tooth voltages of about 1000 v can be obtained if the generator part of the circuit is properly designed."

Amplification or transformation of the saw-tooth voltages rounds off the peaks by removal of the high frequencies (A in Fig. 15). This can be remedied by adding, before or after the amplification, a second saw-tooth voltage B, decaying considerably more rapidly than the oscillation A. Fig. 16 shows a circuit for this purpose.

2423. THE MULTIVIBRATOR [and Its Use as Pulse Generator for Television, Phototelegraphy, etc: Improvement of Rectangular Wave-Form, Production of Saw-Tooth Pulses, etc.].—R. Theile & R. Filipowsky. (*Funktech. Monatshefte*, March 1942, No. 3, pp. 33–44.)

For a preliminary paper by Theile alone *see* issue for Nov. 1941, No. 11, pp. 171–176. Fundamental circuit—a symmetrical back-coupled resistance amplifier and its mode of action. Frequency and amplitude of oscillations (Figs. 3–6, frequency curves of normal multivibrators for 2 c/s to 10 kc/s, with various commercial triodes and pentodes: calculation of frequency or periodic time from the duration of exponential equilibrating processes—Vecchiacchi, 2772 of 1941: the case of asymmetrical

working. Curve-form of the anode-voltage pulse, and the predominant rôle of the anode-resistance × grid-condenser time-constant (with illustrative oscillograms): improvement of flank-steepness by ohmic resistance connected in grid lead (patent by M. Geiger: Fig. 17) and the elimination of a defect of this arrangement by a small parallel condenser. Synchronisation and the generation of saw-tooth voltages (and the elimination, for simplicity, of the additional discharge valve): etc.

2424. A CONFERENCE ON CATHODE PHENOMENA IN A VACUUM AND IN RAREFIED GASES.—B. V. Gorelik & A. A. Ravdel. (*Journ. of Tech. Phys.* [in Russian], No. 13, Vol. 10, 1940, pp. 1147–1148.)

A brief report on a conference held in Kiev in June 1940. Forty-two papers were read: the following are some points of particular interest:—Vekshinski, in investigating oxide-caesium photocells, has developed an ingenious method of a light probe. The probe has a very small area (0.5×0.05 mm^2) and enables the automatic registration of the sensitivity of the cell to be effected. Borzyak has discovered a photoconductivity of antimony-caesium cathodes which contradicts the conclusions reached by other investigators. Prilezhaev has reported on the photoeffect and secondary emission from potassium treated by atomic hydrogen. Dobretsov, in his investigation of the evaporation temperature of electrons from thoriated tungsten in an electric field, has found that Schottky's theory is applicable only to pure metals.

2425. X-RAY STUDY OF SELENIUM IN THE LIQUID AND COLLOIDAL STATE.—K. Das Gupta & S. R. Das. (*Indian Journ. of Phys.*, Dec. 1941, Vol. 15, Part 6, pp. 401–409.)

MEASUREMENTS AND STANDARDS

2426. THE ELECTRICAL FUNDAMENTAL OSCILLATION OF THE CYLINDRICAL TWO-LAYER CAVITY [with Application to Measurement of Dielectric Constants].—Borgnis. (*See* 2306.)

2427. MEASUREMENT OF COMPLEX IMPEDANCE AT 3000 MEGACYCLES.—V. Carson. (*Proc. I.R.E.*, May 1941, Vol. 29, No. 5, p. 288: summary only.) Using the impedance-converting properties of coaxial cables.

2428. MEASUREMENT OF CABLE ATTENUATION AT 300 MEGACYCLES PER SECOND.—G.W.O.H: Race & Larrick. (*Wireless Engineer*, Feb. 1942, Vol. 19, No. 221, pp. 47–48.) Editorial on the paper dealt with in 175 of January.

2429. A SIGNAL GENERATOR FOR THE RANGE 50 TO 400 Mc/s [Drastic Modifications of Technique: Circular, Rotatable Transmission Line: Short-Circuiting of Unused Portions: etc.].—J. M. VanBeuren. (*Electronics*, Dec. 1941, Vol. 14, No. 12, pp. 34 and 35.) *See* also *Communications*, Nov. 1941, pp. 24–25.

2430. A CURRENT AND VOLTAGE MEASURING DEVICE OF HIGH SENSITIVITY, FOR THE ULTRA-SHORT-WAVE REGION [on the Hot-Wire & Optical ("Schlieren") Principle].—J. Malsch & W. Frings. (*Zeitschr. f. tech. Phys.*, No. 2, Vol. 23, 1942, pp. 50–53.)

Malsch's original apparatus (640 of 1938), improved by the use of a differential element in place of the single photocell, has proved useful in the laboratory. The present paper describes how it has been modified for more general practical use. The original length of about 2 m has been reduced to about 45 cm by introducing a reflecting prism, the long optical path necessary for high sensitivity being thus maintained, while the sensitivity is actually doubled by the fact that the light ray now passes the hot wire twice instead of once. The original mirror galvanometer has been replaced by a milliammeter supplied from a compensated d.c. amplifying stage followed by a single-valve output stage.

The light source (L_1 in Fig. 3) is a short coiled incandescent filament parallel to the h.f. hot wire, and is focused by the lens L_1 onto the prism P, so that close to the hot wire (which with its connections is represented in Fig. 3 rather like a vertical dipole aerial) there are formed two light streaks parallel to the wire. The lens L_2 focuses the grating R_1 (with its lines parallel to the hot wire) onto the split complementary grating R_2, behind which lies the differential photoelement. Once the adjustments to the positions of lamp, the grating R_1, and the two parts of the grating R_2 were made, no further adjustments have proved necessary over some months. Fig. 4 shows a horizontal section of the portion containing prism, hot wire (shown as a dot), and lens L_2. The hot wire can easily be changed for various ranges of current. With a 2 cm-long manganin wire of 10 ohms resistance for a consumption of one milliwatt the current (independent of wavelength, which was varied down to about 3 m) could be measured with an accuracy within 5%.

With higher power consumption the accuracy increases, since the temperature gradients producing the striae effect then mask the disturbing action of small, irregular air movements.

Figs. 7 & 8 show results plotted for d.c. and a 3 m wave respectively, the abscissae representing the values given by the "Schlieren" method while the ordinates (to the crosses) give the values read from a commercial thermojunction instrument. The ordinates given by the circles represent the values indicated by Braune's special instrument dealt with in 2431, below.

2431. A NEW MEASURING INSTRUMENT FOR ULTRA-HIGH FREQUENCIES [Special Hot-Wire Design].—F. Braune. (*Zeitschr. f. tech. Phys.*, No. 2, Vol. 23, 1942, pp. 53–54.)

This is the instrument whose results are compared with those of a commercial thermojunction-type meter and of a new "Schlieren"-principle instrument, in Malsch & Frings' paper (2430, above). It consists of a 5 cm-long 0.015 mm-thick manganin wire stretched very close to, and in the same horizontal plane as, a stretched glass fibre of the same length. Wire and fibre each has at one end a tension device made of pertinax, with a set-screw adjustment. At the centre, a small mirror of black glass (to avoid eddy-current effects) is cemented asymmetrically to wire and glass. The wire, when

a h.f. current heats it, slackens slightly, and the mirror tilts about the glass fibre through an angle depending on the current strength, thus causing a displacement of the image of a fixed scale (outside the case) with respect to the spider lines of a telescope on the other side of the case. Fluctuations of the ambient temperature can be allowed for by making the terminations of the hot wire of a material with a suitable coefficient of expansion, but this was not done in the model tested.

2432. FREQUENCY-MODULATION SIGNAL GENERATOR DESIGN [for testing F.M. Equipment: Compromise between Performance & Cost (ruling out Phase Modulation and leaving Reactance-Valve Method)].—C. J. Franks. (*Electronics*, Dec. 1941, Vol. 14, No. 12, p. 34: summary only.) *See* also *Communications*, Nov. 1941, pp. 27, 28.

2433. INPUT IMPEDANCES OF VACUUM THERMO-JUNCTIONS AT ULTRA-HIGH FREQUENCIES [around 150 Mc/s: using Lecher-Wire Method for Analysis of Impedances (780 of March): Results showing Importance of Individual Analysis, for Successful Matching: Response is Proportional to D.C. Calibration Curve].—D. Rogers & G. Williams. (*Nature*, 13th June 1942, Vol. 149, pp. 668–669.)

2434. A THERMOCOUPLE FOR INSERTION INTO SMALL GAPS.—V. P. Kislov. (*Journ. of Tech. Phys.* [in Russian], No. 7, Vol. 11, 1941, pp. 674–679.)

The end (10–20 mm) of the thermocouple needle (Fig. 1) has the shape of a dagger and is made of constantan. Copper over this length is replaced by a very fine film of gold (0.5–0.8μ), separated from the constantan by a layer of enamel 3 to 5μ thick. The needle can be inserted into spaces 0.1–0.2 mm wide.

2435. TEMPERATURE ESTIMATES OF THE PLANET MARS, 1924 AND 1926 [with an Appendix on Thermocouples for Planetary Radiometry].—W. W. Coblentz. (*Journ. of Res. of Nat. Bur. of Stds.*, March 1942, Vol. 28, No. 3, pp. 297–309.)

2436. THE MODE OF ACTION OF THE BIMETALLIC STRIP AND ITS USE IN MEASURING TECHNIQUE.—A. Schwartz. (*Zeitschr. f. Instrkunde*, April 1942, Vol. 62, No. 4, pp. 143–144: summary only.) For other recent work on bimetallic strips *see* 1234/5 & 2057 of 1940 and 1191 of 1941.

2437. THE TWIN-T METHOD OF MEASURING COIL CONSTANTS [Editorial on General Radio Company's Extension of the Bridged-T Circuit (Editorial, 3459 of 1941) & Its Incorporation in Commercial Instrument for 0.5 to 30 Mc/s].—G. W. O. H. (*Wireless Engineer*, Nov. 1941, Vol. 18, No. 218, pp. 441–442.) Based on the papers dealt with in 1549 of 1940 & 148 of 1941.

2438. A THREE-PHASE BRIDGE [making Use of the 60° Phase Displacement "on tap" from Power Mains instead of the Artificial 90° of a Wheatstone Bridge, so that Pure Resistances can be used for All the Known Branches].—R. O. Kapp. (*BEAMA Journal*, May 1942, Vol. 49, No. 59, pp. 124–125.)

2439. PHASE-SHIFTING UP TO 360 DEGREES [Review of Bridge Phase-Changers, leading to Description of Continuously Adjustable Circuit for 0°–360°, Independent of Frequency over Wide Range].—F. A. Everest. (*Electronics*, Nov. 1941, Vol. 14, No. 11, pp. 46–49 and 122.)

2440. THE PHASE CYCLOMETER [for Use with the Rotary Phasemeter (1123 of 1941) when Insertion Phase Shift exceeds 360°: primarily for Development of Television Equipment].—H. T. Mitchell & T. Kilvington. (*P.O. Elec. Eng. Journ.*, Oct. 1941, Vol. 34, Part 3, pp. 115–117.)

2441. THE USE OF THE COLD-CATHODE CATHODE-RAY OSCILLOGRAPH FOR STRUCTURAL RESEARCH AND ABSOLUTE MEASUREMENTS, BY MEANS OF ELECTRON DIFFRACTION.—Induni. (*See* 2578.)

2442. A VALVE-VOLTMETER FOR HIGH VOLTAGES [Several Hundred Volts, D.C. or A.C. (in Present Models up to 10 kc/s): Use of Cathode-Follower Circuit].—J. F. Tönnies. (*E.T.Z.*, 9th April 1942, Vol. 63, No. 13/14, pp. 153–156.)

In many fields, particularly in amplifier technique, it is desirable to use a valve-voltmeter to measure such voltages: transforming down to a range suitable for the ordinary valve-voltmeter, either by transformer or by voltage-divider, introduces a fresh source of uncertainty and also a consumption of energy which is likely to react on the source under measurement. With the circuit here described the absence of measuring current is even better maintained than with ordinary thermionic voltmeters: the usual grid-leak resistance can be dispensed with. The permissible height of voltage is, thanks to the use of "opposed coupling" [negative voltage-feedback] limited only by the voltage-insulation of the valve employed: this limit is about 1000 v for mass-produced broadcasting valves under the conditions of the circuit in question.

The basic circuit in its simplest form is seen in Fig. 1. The voltage U_e to be measured is applied with its positive pole to the grid, producing through the valve an anode current I_a which causes a voltage-drop $I_a R_a$ across the anode-circuit loading-resistance R_a (in the cathode lead). This raises the cathode potential so that it is more positive than the grid potential: the grid is then negative, by the amount U_{gk}, with respect to the cathode, the value of U_{gk} so adjusting itself as to keep in equilibrium with the value of I_a. Too high a value of I_a would make $I_a R_a$ too large, so that the grid would become more negative to the cathode than would correspond to the value of I_a. Thus the value $I_a R_a$ works in opposition to the test voltage U_e applied to the grid. According to the value of R_a and the anode voltage U_a, the voltage drop $I_a R_a$ may amount to as much as 80% of U_a, so that a working range of about the same value is permissible for the voltage to be measured: for $U_a = 700$ v,

U_e can rise to +500 v without the valve being driven into the region of grid current. The curved part of the valve characteristic is not employed, and over the straight part the controlling factor for the difference between all voltage changes of the grid and those of the cathode, in this arrangement, is the ratio $(v+1)/v$, where v is the effective amplification factor: for normal triodes this is about 30, so that the ratio is about 1.05. Thus the cathode is forced to follow the control of the grid very accurately, much more so than does the anode in the more usual valve circuits: the writer suggests that this circuit, patented in Germany in 1916 but left unappreciated for the next twenty years, should be called the "imperative amplifying stage" [for English papers on "cathode followers" *see*, for example, 464 of 1939, 3763 of 1940, and 816, 2099, & 2379 of 1941]: it has many applications, especially in measuring apparatus, as for instance in the photocell-compensator [for this device *see* references in 1633 of June].

In its completed form (Fig. 7) the instrument contains a mains unit and a moving-coil meter: eight press-buttons connect for the 20, 100, 200, or 400 v range, for D.C. or A.C: according to Geisel's circuit of Fig. 6 the range changes simply involve a change of the resistance R_m. Accuracy is within ±2% of the full-scale reading. Various precautions against overloading, etc., are provided.

2443. AN ALTERNATING CURRENT APPARATUS FOR MEASURING DIELECTRIC CONSTANTS.—B. E. Hudson & M. E. Hobbs. (*Review Scient. Instr.*, April 1942, Vol. 13, No. 4, pp. 140–143.)

Replacing the battery-operated equipment (3692 of 1940, on determination of electric moment of molecules) to save attention and expense in maintenance. The new apparatus follows somewhat the same general lines as that of Stranathan (264 of 1935) but has certain improvements, including a higher degree of stability.

2444. ON THE USE OF GASEOUS-DISCHARGE PLASMA AS AN ELECTRODE IN MEASURING THE CONDUCTIVITY OF DIELECTRICS OR SEMICONDUCTORS [with Bearing on Oxide-Coated Cathodes].—A. R. Shul'man [Schulman]. (*Journ. of Tech. Phys.* [in Russian], No. 13, Vol. 10, 1940, pp. 1121–1127.)

Extending a previous work (612 of 1940) criticising the method proposed by Fairbrother for measuring the conductivity of semiconductors, an improved method is described. The main features of the new method, which it is claimed is suitable for use at temperatures almost up to the melting point of the material under investigation, are: (a) improved insulation of the stem supporting the tungsten filament covered by a layer of the material, and (b) a different method for determining the surface potential of the material. In addition, the necessity of ensuring the absence of cracks and pores in the material is emphasised. Several experimental curves supporting the argument are shown.

2445. AN INSULATION-RESISTANCE METER: SELF-CONTAINED INSTRUMENT FOR ROUTINE AND LABORATORY WORK [covering Range 10^7 to 10^{12} Ohms, Alternative Test Voltages 500, 750, and 1000 Volts: primarily for testing Small Mica or Ceramic Condensers: Valve Megohmmeter, with All Essentials for Development as Automatic Equipment].—T. J. Rehfisch. (*Wireless Engineer*, Feb. 1942, Vol. 19, No. 221, pp. 49–51.) Used, in mass-production testing, with the device dealt with in 1715 of 1941.

2446. TESTING RADIO COMPONENTS: "AGEING" AND TROPICAL HUMIDITY TESTS [Notes based on Opening Remarks at I.E.E. Informal Discussion].—P. R. Coursey. (*Wireless Engineer*, March 1942, Vol. 19, No. 222, pp. 96–100.) For Westcombe's criticism of Coursey's preference for the steam-injection method *see* May issue, No. 224, p. 201.

2447. PENETRATION OF MAGNETIC INTERFERENCE INTO BROADCASTING APPARATUS [Correcting Devices, Amplifiers, Microphones, etc.] AND ITS MEASUREMENT [using a Uniform Field (1 m diam. Spherical Space) between Two 2.5 m Square Coils: also Measurements on Fields produced by Mains Units, etc.].—W. Schlechtweg. (*Funktech. Monatshefte*, Jan. 1942, No. 1, pp. 1–3.) Of topical importance owing to the expenditure of nickel in screening.

2448. THE FREQUENCY SPECTRUM [and the Present Confusion of Terminology].—Fleming-Williams. (*See* 2293.)

2449. THE GENERATION AND DISTRIBUTION OF A STANDARD 1 kc/s SYNCHRONISING SIGNAL [for Carrier-Telephony Systems].—C. F. Booth & G. Gregory. (*P.O. Elec. Eng. Journ.*, Jan. 1942, Vol. 34, Part 4, pp. 156–160.)

2450. GENERATION OF SUBHARMONICS [Method giving Stability & Excellent Wave-Form].—J. S. Prichard. (*Proc. I.R.E.*, May 1941, Vol. 29, No. 5, p. 288: summary only.)

"The output of a modulator, filter, and amplifier is partially fed back to the input through a limiter and harmonic generator. The frequencies are adjusted so that the difference between the multiple of the output fed back to the input and the input is the desired subharmonic." A frequency division of 20 is obtained easily.

2451. THE MULTIVIBRATOR [Survey, with Methods of modifying Wave-Form, etc.].—Theile & Filipowsky. (*See* 2423.)

2452. METHODS FOR THE DETERMINATION OF THE HARMONIC CONTENT OF COMMERCIAL ALTERNATING CURRENTS [Theoretical Comparison of the "*PR*" and "*RR*" Connections].—H. Kind. (*Arch. f. Elektrot.*, 30th Sept. 1941, Vol. 35, No. 8, pp. 445–476.)

2453. TYPICAL PORTABLE RELAY-TESTING EQUIPMENTS [for Protective Gear].—A. Stephenson. (*Met.-Vickers Gazette*, April 1942, Vol. 20, No. 336, pp. 46–51.)

2454. THE GEOMETRIC DESIGN OF THE REPULSION MOVING-IRON INSTRUMENT.—E. H. W. Banner. (*BEAMA Journal*, May 1942, Vol. 49, No. 59, pp. 126–128.)

2455. THE SUSPENSION OF THE MOVING ELEMENT IN MEASURING INSTRUMENTS: CORRECTIONS.—P. M. Pflier. (*Zeitschr. V.D.I.*, 21st Feb. 1942, Vol. 86, No. 7/8, p. 128.) The original paper was in the same journal, Vol. 84, 1940, p. 575 onwards.

2456. THE MEASUREMENT OF THE DIAMETER OF A THIN FILAMENT BY A DIFFRACTION METHOD.—V. Rogov. (*Journ. of Tech. Phys.* [in Russian], No. 4, Vol. 11, 1941, pp. 378–384.)

A method in which use is made of the diffraction image of a filament is described and the theory given. It is claimed that by this method diameters within a range of 0.01 to 0.001 mm can be measured with an error not exceeding 5%.

SUBSIDIARY APPARATUS AND MATERIALS

2457. ELECTRON-PATH RECORDER: A TOOL FOR VALVE DEVELOPMENT.—Müller. (*See* 2379.)

2458. PHOTOGRAPHY OF CATHODE-RAY-TUBE TRACES [and the Factors affecting It: Screen Materials: Types of Film (and Hypersensitisation): Cathode-Ray Tubes: Lenses: Exposure Formula: Method used to obtain Data].—Folkerts & Richards. (*R.C.A. Review*, Oct. 1941, Vol. 6, No. 2, pp. 234–244.)

2459. CIRCULAR-TRACE CATHODE-RAY-TUBE ARRANGEMENTS WITH SOME SPECIAL FEATURES [used as Indicator for U.H.F. Radio-Range].—Luck. (In paper dealt with in 2388, above.)

2460. A VERSATILE OSCILLOSCOPE.—Gilson. (*Electronics*, Dec. 1941, Vol. 14, No. 12, pp. 22–24.)

Designed to include all the features which appear necessary, or at least highly desirable, and which hitherto are to be found only in specially designed research equipment. "The original features in the unit described here are the method of eliminating the influence of the amplitude control on the position of the spot in the direct-coupled sweep circuit, and the inclusion of a unity amplifier [with load resistor in cathode circuit, giving extremely high inverse feedback] for use in observing potential changes in circuits from which no current can be drawn without disturbing their operation". For the vertical deflection a direct-coupled push-pull amplifier is used: this has several advantages. Provision is made for single sweep and spiral sweep: a *z*-axis amplifier is included for intensity-modulation (*e.g.* for eliminating the return trace in the linear sweep, time-marking, etc.)

2461. A CATHODE-RAY OSCILLOGRAPH FOR STUDYING NON-STATIONARY OSCILLATIONS.—Slavin. (*Journ. of Tech. Phys.* [in Russian], No. 7, Vol. 11, 1941, pp. 645–648.)

For studying non-stationary phenomena occurring irregularly and within very short time intervals, as for example in the case of the discharge of a condenser into a load, it is necessary to use complicated high-voltage oscillographs with electron recording. It is suggested that ordinary low-voltage cathode-ray oscillographs could be used for this purpose if a scanning system could be evolved which would start operating at exactly the moment the phenomenon appears. It would then be possible, by switching on and off the circuit under observation, to obtain a series of stationary "impressions" on the screen which could be either observed directly or photographed. Accordingly, a circuit is proposed connected to the deflecting plates of the oscillograph and in parallel to the key controlling a condenser-discharge circuit. Means are also suggested for preventing the "reverse movement" of the electron ray. Fig. 6 (opposite p. 648) shows a photograph of a 15 kc/s discharge.

2462. THE USE OF THE COLD-CATHODE CATHODE-RAY OSCILLOGRAPH FOR STRUCTURAL RESEARCH AND ABSOLUTE MEASUREMENTS, BY MEANS OF ELECTRON DIFFRACTION.—Induni. (*See* 2578.)

2463. ON THE INTENSITY-DISTRIBUTION IN THE CROSS SECTION OF AN ELECTRON BEAM.—Dosse & von Schelling. (*Physik. Zeitschr.*, 15th Dec. 1941, Vol. 42, No. 23/24, pp. 399–405.)

Supplementing Glaser's work (303 of 1936 and back references), the writers give the calculation of the cross-sectional intensity distribution for an arbitrary electric, magnetic, or combined lens field, and apply their results to the special case of the particular magnetic field dealt with exhaustively by Glaser (2205 of 1941), which represents very closely the conditions in the Ruska–von Borries super-microscope. The calculated distribution for this lens is shown in Fig. 2 (Finsterwalder's calculated distribution in the image-plane of an optical lens is seen in Fig. 3 for comparison) and is compared with experimental results obtained with an electron-microscope, and with Gullstrand's observations with a glass lens.

2464. SOME SIMPLIFIED METHODS OF DETERMINING THE OPTICAL CHARACTERISTICS OF ELECTRON LENSES.—Spangenberg & Field. (*Proc. I.R.E.*, March 1942, Vol. 30, No. 3, pp. 138–144.) A summary was dealt with in 1142 of April.

2465. THE DETERMINATION OF THE OPTICAL PROPERTIES OF THICK MAGNETIC LENSES, AND THE APPLICATION OF THESE LENSES TO BETA-RAY SPECTROMETRY [and the Utilisation of the Magnetic Image-Rotation to increase the Resolving Power].—Siday. (*Proc. Phys. Soc.*, 1st May 1942, Vol. 54, Part 3, No. 303, pp. 266–277.) For Witcher's paper, referred to here, *see* 3125 of 1941.

2466. FLEXIBLE SWEEP CIRCUIT AND DEFLECTION AMPLIFIER [for Single-Sweep Operation for Frequencies up to 20 kc/s: Further Development of 2503 of 1941].—Geohegan. (*Electronics*, Dec. 1941, Vol. 14, No. 12, pp. 38–39.)

2467. SINGLE-STAGE GENERATORS FOR THE PRODUCTION OF HIGH-VOLTAGE SAW-TOOTH OSCILLATIONS.—Kinne. (*See* 2422.)

2468. APPENDIX ON THE EQUATIONS OF SAW-TOOTH AND SQUARE-TOPPED IMPULSE WAVES.—Monfort & Somers. (In paper dealt with in 2421, above.) Extension of von Ardenne's work, 1095 of 1938.

2469. THE MULTIVIBRATOR [Survey, with Methods of modifying Wave-Form, etc.].—Theile & Filipowsky. (*See* 2423.)

2470. A 300-KILOVOLT ELECTRON MICROSCOPE.—Zworykin & others. (*Electronics*, Dec. 1941, Vol. 14, No. 12, p. 33: summary only.)

2471. ON THE SUITABILITY OF BERYLLIUM FOR THE PREPARATION OF SURFACE-IMPRESSION FOILS FOR THE ELECTRON MICROSCOPE.—O. Rüdiger. (*Naturwiss.*, 8th May 1942, Vol. 30, No. 19, p. 279.)

From the von Ardenne laboratories. The writer and his colleagues have used with success aluminium-film replicas for investigations of the surface structure of iron and steel specimens. The grain of the aluminium foil is fine enough to allow perfect magnifications up to 10 000, if the aluminium is deposited slowly from its tungsten carrier at short distances. But if, for the sake of easier separation of the film, the thickness of the latter is increased to about 100 mμ, dispersion troubles set in and spoil the sharpness of the image. If, however, beryllium is used instead of aluminium, dispersion only occurs for very thick films, and the grain is so fine that even higher amplifications can be used. Stripping of the foil is easily done by immersion in water slightly acidulated with sulphuric acid. For other work on this kind of technique *see*, for example, 2065 of July. *See* also *Zeitschr. V.D.I.*, 13th June 1942, Vol. 86, No. 23/24, p. 382.

2472. A NOTE ON THE MODE OF ACTION OF THE FUSING MEDIUM FOR ZINC-SULPHIDE AND CADMIUM-SULPHIDE PHOSPHORS.—Schlegel. (*Naturwiss.*, 17th April 1942, Vol. 30, No. 16, p. 242.)

Up to the present there has been no clear idea as to this action: all that has been known is that the addition of about 2–4% of NaCl to ZnS or CdS, or to a mixture of these, under the usual conditions of preparation and with the same temperature, results in a phosphor giving much higher light intensities than the phosphor without that addition. The chloride is particularly effective, whereas the sulphate has no effect. "A simple explanation is now available, and can be confirmed experimentally," as described in the present letter. It appears that the NaCl helps the dissociation $ZnS \rightarrow Zn+S$, which without it takes place very much more slowly and at a much higher temperature, since in the equilibrium $ZnS \rightleftarrows Zn+S$" the dissociation pressure at, for instance, 1173° K is only about 10^{-6} atmosphere. "From these considerations there follow further very important conclusions, which will be reported on in the near future." Some of these throw light on the activation process, for example when copper is the agent: here the fusing medium helps the dissociation of the activator sulphide, so that the freed copper can pass where the CuS molecule is too big to penetrate. It is to be presumed that the reactions with the fusing medium occur during crystallisation, not in the completed lattice.

2473. FINE STRUCTURE AND LINE DISPLACEMENT IN THE SPECTRA OF CHROMIUM PHOSPHORS [Displacement, towards Long Wavelengths, of Fluorescence Lines with respect to the Absorption Lines].—Deutschbein & others. (*Naturwiss.*, 3rd April 1942, Vol. 30, No. 14/15, p. 228.)

2474. THE USE OF FUSIBLE ALLOY IN VAPOUR DIFFUSION PUMPS [with Arc Heating: Vacuum of ½ Micron with Single-Stage Pump (operating against 40-Micron Rough Vacuum): Vapour Traps eliminated].—Abbott. (*Review Scient. Instr.*, April 1942, Vol. 13, No. 4, p. 187.)

2475. PROTECTION FOR ELECTRODE LEADS SEALED INTO GLASS WALLS [Electrolytic Deposition of Leak-Producing Skin prevented by "Blind" Electrodes connected to Positive Lead].—Gehrts. (*Funktech. Monatshefte*, Feb. 1942, No. 2, p. 27.) Telefunken Patent, DRP 667 449.

2476. DIFFUSION OF HEAT THROUGH A RECTANGULAR BAR, AND THE COOLING AND INSULATING EFFECT OF FINS: I—THE STEADY STATE.—Avrami & Little. (*Journ. Applied Phys.*, April 1942, Vol. 13, No. 4, pp. 255–264.) A summary was dealt with in 1977 of July.

2477. EXPERIMENTS ON THE GENERATION OF THE CATHODE SPOT ON MERCURY BY AN ELECTRON BEAM.—Boldyr & Greben. (*Journ. of Tech. Phys.* [in Russian], No. 13, Vol. 10, 1940, pp. 1140–1142.)

A description is given of a controlled gaseous-discharge tube with a liquid mercury cathode (ignitron). The control is effected by means of an electron beam striking the mercury surface. It was found that the discharge would not start with a clean mercury surface, but after this was covered with a layer of dielectric dust (quartz or Al_2O_3) the tube would operate reliably with an electron velocity of 25–30 v and a current of 1 ma.

2478. DIELECTRIC IGNITERS FOR MERCURY-POOL-CATHODE TUBES.—Klemperer. (*Electronics*, Nov. 1941, Vol. 14, No. 11, pp. 38–41.)

2479. MERCURY-VAPOUR RECTIFIERS WITH STARTER-ROD CONTROL [Ignitron Type: Physical Principles and Recent Developments].—Arends. (*E.T.Z.*, 20th Nov. 1941, Vol. 62, No. 46/47, pp. 923–927.)

2480. "DIFFUSION IN AND THROUGH SOLIDS" [Book Review].—Barrer. (*Review Scient. Instr.*, April 1942, Vol. 13, No. 4, pp. 164–165.)

2481. THE DISTRIBUTION OF AUTELECTRONIC EMISSION FROM SINGLE-CRYSTAL METAL POINTS: II.—Benjamin & Jenkins. (*See* 2383.)

2482. NEGATIVE POINT-TO-PLANE CORONA IN AIR [and the Explanation of the Relaxation-Oscillation-like Trichel Pulses (1188 of 1939)], *and* PROPERTIES OF CORONAS IN PURE AND IMPURE H_2, N_2, and A.—Hudson: Weissler. (*Phys. Review*, 1st/15th Feb. 1942, Vol. 61, No. 3/4, p. 205: p. 205.)

2483. ON THE USE OF GASEOUS-DISCHARGE PLASMA AS AN ELECTRODE IN MEASURING THE CONDUCTIVITY OF DIELECTRICS AND SEMI-CONDUCTORS.—Shul'man. (*See* 2444.)

2484. BREAKDOWN VOLTAGES OF H_2, O_2, N_2, NO, HCl, HBr, AND HI.—Kovalenko. (*Journ. of Tech. Phys.* [in Russian], No. 12, Vol. 10, 1940, pp. 1014–1020.)

Experiments were conducted at a constant ratio p/T (equal to 1/10) so as to measure the breakdown voltages with approximately the same number of molecules per cm^3. The voltages so obtained and the properties of the gases are set out. Calculations made on the basis of the ionisation theory are confirmed by experimental results in the case of gases whose molecules are made up of the same atoms, and contradicted when the molecules are made up of different atoms.

2485. THE BREAKDOWN OF COMPRESSED GASES.—Matveev & Kharakhorin. (*Journ. of Tech. Phys.* [in Russian], No. 12, Vol. 10, 1940, pp. 1021–1026.)

Experiments were made with air and helium under pressures varying from 10 to 200 kg/cm^2. In the case of air, temperature was also varied from + 20° to − 129° C. It was found that under equal pressures the electric strength of helium is lower than that of air, and that for the same density of gas the electric strength is considerably lowered with the decrease in temperature.

2486. THE TEMPERATURE COMPENSATION OF CONDENSERS [Discussion of T.Cs of Paper, Mica, Ceramic, & Air Condensers: Recent Improvement in Thermal Behaviour of Mica Condensers: Disadvantages of Ceramic Condensers: Design for Zero-T.C. Fixed Air Condenser: Disagreement with Thomas's Statement on T.C. of Air Condenser: Criticism of His Compensation Method & of "Ceramic Compensator" Plan: Author's Bimetallic-Member Method: etc.].—Griffiths. (*Wireless Engineer*, March & April 1942, Vol. 19, Nos. 222 & 223, pp. 101–111 & 148–157.)

For criticisms by Westcombe, regarding ceramic condensers and also the effect of assembly strain on air condensers, *see* May issue, No. 224, p. 201: on pp. 199–200 are other criticisms, by Coursey and Tinckham.

2487. ELECTRIC STRENGTH OF DIELECTRICS, *and* ELECTRIC BREAKDOWN OF IONIC CRYSTALS.—Austen & Whitehead: Fröhlich. (*Phys. Review*, 1st/15th Feb. 1942, Vol. 61, No. 3/4, pp. 199–200: pp. 200–201.) Correspondence prompted by the papers of von Hippel & others (2847 of 1941), who reply on p. 200 to the first letter.

2488. RELATION BETWEEN VISCOSITY OF SOLUTIONS AND PHYSICAL PROPERTIES OF HIGH POLYMERS [including Polystyrene]. — Simha. (*Journ. Applied Phys.*, March 1942, Vol. 13, No. 3, pp. 147–153.)

2489. ON RELAXATION EFFECTS IN AMORPHOUS MEDIA [Survey of Past Work, leading to Mathematical Development for High-Molecular-Weight Materials, assuming Continuous Distribution of Relaxation Rates].—Simha. (*Journ. Applied Phys.*, March 1942, Vol. 13, No. 3, pp. 201–207.) For Frenkel & Obrastzovs's work, here specially referred to, *see* 3085 of 1940.

2490. VINYL RESINS [Survey from Laboratories of Director, Scientific & Industrial Research, Calcutta].—Bhatnager & Sunawala. (*Sci. & Culture* [Calcutta], Oct. 1941, Vol. 7, No. 4, pp. 208–215.)

2491. FLEXIBLE DIELECTRIC MATERIALS FOR COAXIAL CABLE [Copolene S & Copolene B: including Advantages of Solid-Dielectric Cable over Beaded Type in Aircraft Applications].—Selvage. (*Electronics*, Dec. 1941, Vol. 14, No. 12, p. 31: summary only.) *See* also *Communications*, Nov. 1941, p. 18.

2492. THE USE OF PLASTICS IN THE RADIO INDUSTRY [and War-Time Shortages for Civilian Needs].—Richardson. (*Electronics*, Dec. 1941, Vol. 14, No. 12, pp. 85–86: summary only.)

2493. DIELECTRIC CONSTANT, POWER FACTOR, AND CONDUCTIVITY OF THE SYSTEM RUBBER-CALCIUM-CARBONATE [including Measuring Technique for Dielectric Constant, Conductivity, & "Loss Tangents," and a Discussion of Formulae for Dielectric Constants of Mixtures (*cf.* 1806 of June)].—Scott & McPherson. (*Journ. of Res. of Nat. Bur. of Stds.*, March 1942, Vol. 28, No. 3, pp. 279–296.)

2494. INSULATION TUBING FOR LOW TEMPERATURES [Transparent "Transflex" Fibronised Tubing, Very Flexible & Tough].—(*Journ. Applied Phys.*, April 1942, Vol. 13, No. 4, p. 274.)

2495. A NOTE ON SOME SPOTTED MICA, AND A NEW MICROANALYTICAL METHOD FOR FERROUS AND FERRIC IRON.—Das Gupta. (*Sci. & Culture* [Calcutta], May 1941, Vol. 6, No. 11, pp. 677–678.)

2496. SYMPOSIUM ON INSULATING OILS [Summary]. —I.E.E. (*Electrician*, 22nd May 1942, Vol. 128, pp. 513–516.)

2497. A NOTE ON THE STABILITY OF LIQUID HIGH RESISTANCES [Description of Search for Constant 10^{10} Ohms Resistance to withstand up to 1000 Kilovolts, including Tests with Gemant Mixtures]. — Craggs. (*Journ. of Scient. Instr.*, April 1942, Vol. 19, No. 4, pp. 62–63.)

2498. ATTENUATOR DESIGN: FORMULAS FOR CALCULATING RESISTANCE NETWORKS.—Espy. (*See* 2320.)

2499. A.C.-OPERATED POWER SUPPLY FOR SOUND-LEVEL METERS [including Use of Flash-Light Cells in place of Condenser].—General Radio. (*See* 2405.)

2500. MODERN MATERIALS IN TELECOMMUNICATIONS: PART VIa—SEMICONDUCTORS: PART VIb—CONTACT RECTIFIERS & PHOTOELECTRIC CELLS USING SEMICONDUCTORS.—Radley & others. (*P.O. Elec. Eng. Journ.*, Jan. & April 1942, Vol. 34, Part 4, & Vol. 35, Part 1, pp. 179–183 & 15–20.) For previous parts *see* 3533 of 1941.

2501. THEORY OF ELECTRICAL CONTACT BETWEEN SOLIDS [Metals, and Metals & Semiconductors or Insulators].—Fan. (*Phys. Review*, 1st/15th March 1942, Vol. 61, No. 5/6, pp. 365–371.)

From the Radio Research Laboratory, National Tsing Hua University, Kunming. "It is shown that the density of conduction electrons in a semiconductor can be expected to change appreciably from its normal value, which may be important for the explanation of certain phenomena."

2502. A COPPER-OXIDE RECTIFIER FOR OPERATION AT HIGHER TEMPERATURES.—Sharavski. (*Journ. of Tech. Phys.* [in Russian], No. 12, Vol. 10, 1940, pp. 1045–1048.) For previous work *see* 249 of January. An experimental investigation was carried out as a result of which a process of artificial ageing (heat treatment at 70°C during 10 days) was evolved, ensuring stable operation at temperatures up to 70°C.

2503. THE ELECTRIC BREAKDOWN OF COPPER-OXIDE RECTIFIERS BY DIRECT AND ALTERNATING CURRENTS.—Krauz & Sharavski. (*Journ. of Tech. Phys.* [in Russian], No. 12, Vol. 10, 1940, pp. 1049–1055.)

Several hundred single-sided rectifier discs of 41 mm diameter were experimented with and it was found that the breakdown voltage remained practically the same whether d.c. or a.c. was applied (the average values being 64 and 70 v respectively.) Greater care in finishing off the copper surface did not affect the breakdown voltage. Various other aspects of rectifier operation are also discussed.

2504. THE USE OF A CHEMICALLY INERT ATMOSPHERE IN THE HEAT TREATMENT OF COPPER-OXIDE RECTIFIERS.—Bukreev. (*Journ. of Tech. Phys.* [in Russian], No. 12, Vol. 10, 1940, pp. 1056–1060.)

The nature of the barrier layer is discussed and it is suggested that after the first stage of heat treatment (at 980–1040°C) and before the second stage (at 500–700°C) the copper should be treated in an atmosphere of pure nitrogen at the same temperature as that used during the first stage. It is claimed that a number of improvements in the operation of the rectifiers result from this.

2505. COPPER AND ALUMINIUM [the Question of Fusing Currents, and the Effects of Enclosure within a Covering].—Dudley. (*Electrician*, 1st May 1942, Vol. 128, pp. 419–422.) Further development of 1533 of May.

2506. "THE HIGH-FREQUENCY PROPERTIES OF VARIOUS FORMS OF WIRE SPECIMENS" [Reply to Review Criticisms].—Sutton. (*See* 2321.)

2507. THE SKIN EFFECT AND THE DEPTH OF PENETRATION.—Wheeler. (*See* 2298.)

2508. THE MODE OF ACTION OF THE BIMETALLIC STRIP AND ITS USE IN MEASURING TECHNIQUE.—Schwartz. (*See* 2436.)

2509. "DIE TECHNISCHE PHYSIK DER ELEKTRISCHEN KONTAKTE" [Book Reviews].—Holm. (*E.T.Z.*, 26th Feb. 1942, Vol. 63, No. 7/8, p. 104: *Zeitschr. V.D.I.*, 7th March 1942, Vol. 86, No. 9/10, p. 160.) For a recent paper by this specialist on the subject *see* 860 of March.

2510. SPONGY OR POWDERED CHROMIUM [and Its Possibilities in Alloys, such as for Heating Elements].—(*Engineer*, 15th May 1942, Vol. 173, p. 411.)

2511. CONSERVING TIN [in Solder].—National Lead. (*Electronics*, Nov. 1941, Vol. 14, No. 11, p. 84: summary only.)

2512. THE TILT-NUT [with Many Applications, including to Electrical Purposes].—Mancha-Bennett. (*Engineer*, 22nd May 1942, Vol. 173, p. 436.)

2513. PENETRATION OF MAGNETIC INTERFERENCE INTO BROADCASTING APPARATUS.—Schlechtweg. (*See* 2447.)

2514. PRINCIPLES OF DESIGN OF SMOOTHING CHOKES [having Laminated Cores with Air-Gaps: primarily for Smoothing Filters in Floating-Battery Supply Systems: Curves & Formulae for 4% Silicon-Steel].—Carter & Richards. (*P.O. Elec. Eng. Journ.*, Oct. 1941, Vol. 34, Part 3, pp. 118–125.)

2515. MAGNETIC ANISOTROPY IN ROLLED NICKEL-IRON ALLOYS [and the Dependence of the "Rolling Energy" on the Direction of the Rolling & on the Percentage Composition, etc.]—Conradt & Sixtus. (*Zeitschr. f. tech. Phys.*, No. 2, Vol. 23, 1942, pp. 39–49.)

2516. NEW MAGNETIC MATERIALS [including Benefits from Cutting to take Advantage of Asymmetrical Magnetisation Characteristics], *and* NEW ADVANCES IN IRON CORES [and Their Extension to Ultra-High Frequencies].—Ruder: Polydoroff. (*Electronics*, Dec. 1941, Vol. 14, No. 12, p. 34: pp. 34–35: summaries only.) For the first paper *see* also *Communications*, Nov. 1941, pp. 21..24.

2517. STANDARDS FOR MAGNETIC MATERIALS [for Use under Combined D.C. & A.C: Review of British Standard Specification No. 933–1941].—(*Wireless Engineer*, Dec. 1941, Vol. 18, No. 219, p. 491.)

2518. MAGNETIC DELAY [Specially Heat-Treated Stainless Steel jumps to Magnet after Delay of about 1½ Minutes].—Uhlig. (*Gen. Elec. Review*, April 1942, Vol. 45, No. 4, pp. 245–246.)

2519. ON THE GYROMAGNETIC EFFECTS IN FERROMAGNETIC SUBSTANCES.—Gorter. (*Phys. Review*, 1st Dec. 1941, Vol. 60, No. 11, p. 836.)

2520. HYSTERESIS TORQUE IN ELLIPTICALLY POLARISED FIELDS.—Beck & Clarke. (*Journ. Applied Phys.*, Dec. 1941, Vol. 12, No. 12, pp. 860–866.)

2521. INCREASE OF RESIDUAL MAGNETISM CAUSED BY A CURRENT FLOWING THROUGH AN IRON BAR.—Perkins & Doolittle. (*Phys. Review*, 1st Dec. 1941, Vol. 60, No. 11, pp. 811–817.)

2522. THE CHANGE IN THE ELECTRIC RESISTANCE OF A SINGLE CRYSTAL OF MAGNETITE BY A MAGNETIC FIELD AT LOW TEMPERATURES.—Masumoto & Shirakawa. (*Phys. Review*, 1st Dec. 1941, Vol. 60, No. 11, p. 835.)

STATIONS, DESIGN AND OPERATION

2523. AN ULTRA-SHORT-WAVE TELEPHONE EQUIPMENT FOR THE TROPICS [Ranges 50–60 km: 40 W Transmitters & Superheterodyne Receivers: Both Wavelengths around 4 m: Frequency Stabilisation of Multi-Stage Transmitter by Special Construction of Oscillatory Circuit of Oscillator Stage, No Crystal: Receiver Band-Width only 110 kc/s: Special Air-Cooling Arrangements & Textile-Free Construction].—von Lindern. (*E.T.Z.*, 23rd April 1942, Vol. 63, No. 15/16, p. 195: summary, from *Philips tech. Rundschau*, Vol. 6, 1941, p. 120 onwards.) The name is given as von Pindern, but this is almost certainly a typographical error.

2524. "HANDSET" ULTRA-SHORT-WAVE TRANSCEIVER.—Weltronic Corporation. (*Gen. Elec. Review*, April 1942, Vol. 45, No. 4, p. 248.) With photograph. *See* 1811 of June.

2525. A PACK SET FOR 112-MC. DEFENCE WORK: LIGHT-WEIGHT DRY-BATTERY EQUIPMENT FOR "WALKIE-TALKIE" OPERATION.—Chambers. (*QST*, April 1942, Vol. 26, No. 4, pp. 21–23 and 62, 64.) With plenty of strength over more than "three good-sized city blocks".

2526. A SIMPLE TRANSCEIVER FOR TWO & A HALF METRES [with Simplified Change-Over (Oscillator Valve changed from Super-Regenerative Detector to Power Oscillator simply by disconnecting L.F. Plate By-Pass Condenser): No Microphone Battery].—Gwinn. (*QST*, April 1942, Vol. 26, No. 4, pp. 46–47.)

2527. THE PROVIDENCE POLICE MOBILE RADIO PATROL: HOW ONE AMERICAN CITY SOLVED THE ARP COMMUNICATIONS PROBLEM [by a 100% Amateur Organisation].—Mahoney & Briggs. (*QST*, April 1942, Vol. 26, No. 4, pp. 13–15 and 66, 70.)

2528. CBS INTERNATIONAL BROADCAST FACILITIES [to Latin America & Europe: with Some Details of the New WCBX & WCRC Transmitting Stations & Aerial Systems, at Brentwood: F.M. Relay Links: Estimate of at least 20 db Signal Increase: etc.].—Chamberlain. (*Proc. I.R.E.*, March 1942, Vol. 30, No. 3, pp. 118–129.) For previous work *see* 280 of January.

2529. WABC NEW YORK [on Group of Rocks in Long Island Sound].—(*Electronics*, Dec. 1941, Vol. 14, No. 12, pp. 25–30.) The new CBS station. *See* also *Communications*, Oct. & Nov. 1941, pp. 10–11 & 8–13.

2530. OPERATING RESULTS ON THE NEW BUENOS-AIRES/NEW YORK TWIN-CHANNEL SINGLE-SIDEBAND SHORT-WAVE RADIOTELEPHONE LINK.—Stevens. (*Elec. Communication*, No. 3, Vol. 20, 1942, pp. 186–188.)

"With a total a.c. input of 5 kw, the new single-sideband transmitter provides two good commercial channels, whereas the single-channel double-sideband unit formerly in service required 100 kw at full load."

2531. A MODERN CONTROL ROOM FOR A COMMERCIAL RADIO TRANSMITTER CENTRAL [at Rocky Point, connected by Land Lines to Central Office (New York City) & Riverhead Receiving Station: Equipment & Circuits].—Fletcher & Kennedy. (*R.C.A. Review*, Oct. 1941, Vol. 6, No. 2, pp. 202–221.)

2532. THE C2 CONTROL TERMINAL FOR RADIO-TELEPHONE CIRCUITS [for connecting Long Radio Link to Wire Circuits of Regular Telephone Plant].—Smethurst. (*Bell Lab. Record*, April 1942, Vol. 20, No. 8, pp. 204–208.)

2533. WIRELESS CAPE COD [Correspondence prompted by 2148 of July].—(*QST*, April 1942, Vol. 26, No. 4, pp. 48–49.)

GENERAL PHYSICAL ARTICLES

2534. FURTHER STUDIES ON ACTIVE NITROGEN: III AND IV.—Rayleigh. (*See* 2289.)

2535. "DIFFUSION IN AND THROUGH SOLIDS" [Book Review].—Barrer. (*Journ. Applied Phys.*, March 1942, Vol. 13, No. 3, p. 156.)

2536. "REPORTS ON PROGRESS IN PHYSICS: Vol. 8 (1941)" [Book Review].—Mann (Edited by). (*Proc. Phys. Soc.*, 1st May 1942, Vol. 54, Part 3, No. 303, p. 302.) List of contents only: they include "Recent television developments," by Zworykin & Shelby, "Discharge phenomena in gases," by Lunt, von Engel, & Meek, and "The M.I.T. wavelength project," by Harrison.

2537. A REMARK ON THE LAWS OF BLACK-BODY RADIATION [and a Generalised Version of the Planck Radiation Formula leading to Expression for Stefan-Boltzmann Constant which agrees with Recent Experimental Results].—Császár. (*Naturwiss.*, 24th April 1942, Vol. 30, No. 17/18, p. 265.)

2538. ON THE DEPOLORISATION OF NEUTRON BEAMS BY MAGNETIC FIELDS.—Halpern & Holstein. (*Proc. Nat. Acad. Sci.*, March 1942, Vol. 28, No. 3, pp. 112–118.) Further development of 267 of January.

2539. THE ELECTROMAGNETIC MENTAL PICTURE [and the Desirability of basing Considerations of Capacitance, Inductance, & Transmission on the "Particle" rather than on the

"Field" Picture].—Hatfield. (*Nature*, 28th Feb. 1942, Vol. 149, p. 248.) For a previous letter *see* 293 of January.

2540. THE NATURE OF TEMPERATURE.—Benham. (*Proc. Phys. Soc.*, 1st March 1942, Vol. 54, Part 2, No. 302, pp. 121–128.)

"Evidence is adduced to support the view that the ultimate significance of temperature is that it is measured by the thinness of a pulse of electromagnetic radiation. Some preliminary remarks on a new theory of radiation (which requires that central orbits shall be non-radiating when circular) are used to support a dimensional treatment of which the energy density of radiation is a function of the mass (rather than of the charge) of an electron and of the absolute temperature . . ." For a Discussion *see* issue for 1st May, Part 3, pp. 289..296: and 2541, below.

2541. ON THE DIMENSIONS OF PHYSICAL MAGNITUDES: *also* A NOTE ON PROF. W. WILSON'S "DIMENSIONS OF PHYSICAL QUANTITIES": *and* DIMENSIONS.—Dingle: Burniston Brown: Campbell. (*Phil. Mag.*, May 1942, Vol. 33, No. 220, pp. 321–344: pp. 367–368; p. 398.) (i & iii) Prompted by the "wide disagreement" between recent writers (2893/4 of 1941, 1192/3 of April, and 2540, above. (ii) *See* 1193 of April.

2542. DISCUSSION ON "NOTE ON ELECTRIC AND MAGNETIC DIMENSIONS."—Yarnold. (*Proc. Phys. Soc.*, 1st May 1942, Vol. 54, Part 3, No. 303, pp. 289–296.) *See* 1192 of April.

MISCELLANEOUS

2543. A MORE SYMMETRICAL FOURIER ANALYSIS APPLIED TO TRANSMISSION PROBLEMS.—Hartley. (*See* 2408.)

2544. "ELLIPTIC CYLINDER AND SPHEROIDAL WAVE FUNCTIONS: INCLUDING TABLES OF SEPARATION CONSTANTS AND COEFFICIENTS" [Book Review].—Stratton & others. (*Review Scient. Instr.*, April 1942, Vol. 13, No. 4, p. 180.) *See* also 1594 of June.

2545. "AN INTRODUCTION TO DIFFERENTIAL GEOMETRY WITH USE OF THE TENSOR CALCULUS" [Book Review].—Eisenhart. (*Nature*, 16th May 1942, Vol. 149, pp. 535–536.)

2546. "FOURIER SERIES AND ORTHOGONAL POLYNOMIALS" [Book Review].—Dunham Jackson. (*Review Scient. Instr.*, April 1942, Vol. 13, No. 4, pp. 180–181.)

2547. THE FORMULATION OF AN EXPERIMENTAL LAW BY A RATIONAL FRACTION OR BY THE SUM OF ORTHOGONAL FUNCTIONS, *and* HOW THE COEFFICIENTS OF THE FOURIER DEVELOPMENT MAY LEAD TO THE BETTER FORMULATION OF AN EXPERIMENTAL LAW.—Vernotte. (*Comptes Rendus* [Paris], 1st Dec. 1941, Vol. 213, No. 22, pp. 777–780: 8th Dec., No. 23, pp. 827–829.) Further development of 1827 of June. For continuation *see* issue for 29th December, No. 26, pp. 983–985.

2548. VECTOR COMPUTATIONS [with Charts for Conversion between Rectangular & Polar Coordinates, and for Determination of Reciprocal in Rectangular Coordinates, as in Solution of Multi-Mesh Networks].—Klipsch. (*Electronics*, Dec. 1941, Vol. 14, No. 12, pp. 41–42.)

2549. AN INVERSE PROBLEM CONCERNING A CHAIN PROCESS [as of Radioactive Transformations, Irradiated Microorganisms, Photographic Emulsions, etc.].—Opatowski. (*Proc. Nat. Acad. Sci.*, March 1942, Vol. 28, No. 3, pp. 83–88.)

2550. STATISTICAL CONTROL OF REPETITION WORK [Application at All Convenient Stages, Not only to Final Inspection: etc.].—Dudding & Jennett. (*Engineering*, 29th May 1942, Vol. 153, pp. 433–434.) Prompted by 2167 of July. *See* also *Nature*, 16th May, p. 555.

2551. A SIMPLE INTRODUCTION TO THE USE OF STATISTICS IN TELECOMMUNICATIONS ENGINEERING: PART 3—THE POISSON PROBABILITY LAW: PART 4—CORRELATION AND REGRESSION.—Doust & Josephs. (*P.O. Elec. Eng. Journ.*, Oct. 1941 & Jan. 1942, Vol. 34, Parts 3 & 4, pp. 139–144 & 173–178.) For previous parts *see* 3550 of 1941.

2552. STATISTICAL CONTROL OF PRODUCTION.—Darwin. (*Nature*, 23rd May 1942, Vol. 149, pp. 573–575.)

2553. "FLUID MECHANICS AND STATISTICAL METHODS IN ENGINEERING" [University of Pennsylvania Symposia: Book Review].—Shewhart & others. (*Review Scient. Instr.*, April 1942, Vol. 13, No. 4, pp. 182–183.)

2554. MASS PRODUCTION FOR PRECISION EQUIPMENT [Study of Hallicrafters' Methods].—Emerson. (*See* 2354.)

2555. ON HIGH-PRECISION ELECTRICAL CALCULATING MACHINES, WITH SPECIAL ATTENTION TO A NEW RANGE-FINDER FOR ANTI-AIRCRAFT ARTILLERY: THE VEROGRAPH.—Fischer. (*Schweizer Arch. f. angew. Wiss. u. Tech.*, Jan. 1942, Vol. 8, No. 1, pp. 1–15.) For previous work *see* 1588 of May.

2556. "THE TWIN MARCHANT CALCULATING MACHINE AND ITS APPLICATION TO SURVEY PROBLEMS" [Book Review].—Comrie. (*Proc. Phys. Soc.*, 1st May 1942, Vol. 54, Part 3, No. 303, p. 300.)

2557. OBITUARY: SIR JOSEPH LARMOR, F.R.S.—(*Nature*, 6th June 1942, Vol. 149, pp. 631–633.)

2558. MILESTONES OF COMMUNICATION PROGRESS [in Past 20 Years].—Kohlhaas. (*Elec. Communication*, No. 3, Vol. 20, 1942, pp. 143–185.) With 159 literature references.

2559. THE MOBILISATION OF SCIENCE IN NATIONAL DEFENCE.—Jewett. (*Proc. I.R.E.*, March 1942, Vol. 30, No. 3, pp. 113–118.)

Already referred to in 2179 of July. ". . . I think all who are guiding the work of the NDRC would

exclaim to the ranks of scientists and technicians' 'Bring on your results, the more the better, and we will guarantee them a speedy passage to the firing line!' "

2560. "SCIENCE AND WORLD ORDER: TRANSACTIONS OF A CONFERENCE OF THE DIVISION FOR THE SOCIAL AND INTERNATIONAL RELATIONS OF SCIENCE" [Book Review].—British Association. (*Engineering*, 8th May 1942, Vol. 153, p. 372.) *See* also 3567 of 1941.

2561. SCIENTIFIC RESEARCH AND DEVELOPMENT IN THE EMPIRE.—Hill. (*Engineering*, 29th May 1942, Vol. 153, pp. 435–436: *Engineer*, 29th May 1942, Vol. 173, pp. 447–449.) Gustave Canet lecture, abridged.

2562. RADIO IN PEACE AND WAR [and the Need for Development (Training, Research & Industry) in India].—Mitra. (*Sci. & Culture* [Calcutta], Nov. 1941, Vol. 7, No. 5, pp. 229–232.)

2563. SOME ASPECTS OF RADIO ENGINEERING ECONOMICS.—Hulse. (*Electronics*, Dec. 1941, Vol. 14, No. 12, p. 32: summary only.)

2564. "AUDIENCE ENEMIES": CORRESPONDENCE.—DuBois. (*Science*, 10th April 1942, Vol. 95, pp. 383–384.) Prompted by DuBois' letter on the "reading" of scientific papers, 2196 of July. *See* also issue for 15th May.

2565. REPORT ON 1941 IRE-RMA ROCHESTER FALL MEETING.—(*Electronics*, Dec. 1941, Vol. 14, No. 12, pp. 31–35 and 85..88.) The summaries are dealt with in the appropriate sections of these "Abstracts & References".

2566. PREFERRED SUBJECTS AND TYPES OF PAPERS FOR *Proc. I.R.E*: RESULTS OF ANALYSIS OF 1,600 QUESTIONNAIRES.—I.R.E. (*Proc. I.R.E.*, March 1942, Vol. 30, No. 3, p. 152.)

2567. THE PRODUCTION OF THE *Post Office Electrical Engineers' Journal*.—Leigh. (*P.O. Elec. Eng. Journ.*, Oct. 1941, Vol. 34, Part 3, pp. 126–132.)

2568. EDITORIAL: "THE ADMIRALTY HANDBOOK OF WIRELESS TELEGRAPHY".—G.W.O.H. (*Wireless Engineer*, Dec. 1941, Vol. 18, No. 219, pp. 481–482.)

2569. "PRINCIPLES OF ELECTRON TUBES" [with Special Attention to Industrial Applications of Valves, Photocells, & Gaseous-Discharge Tubes: Book Review].—Reich. (*Review Scient. Instr.*, April 1942, Vol. 13, No. 4, p. 165.)

2570. THE FIRST ANNUAL SCIENCE TALENT SEARCH [among Boys & Girls in High Schools throughout U.S.A: sponsored by *Science Service*].—(*Science*, 1st May 1942, Vol. 95, Supp. pp. 10, 12.) *See* also *Sci. News Letter*, 25th April, pp. 259 & 260.

2571. WHAT DO WE DO NEXT? [Suggestions for Amateur Activities during Closing-Down of Transmitting]: *also* WIRED WIRELESS [for Amateurs]: *and* INDUCTION TRANSMISSION FOR SHORT-DISTANCE COMMUNICATIONS.—Grammer: Goodman: Chambers. (*QST*, March 1942, Vol. 26, No. 3, pp. 9–11 and 58: pp. 12–15 and 58..62: pp. 40–42.)

2572. ARTICLE ON THE USE OF THE INDUCTION FIELD OF A WIRELESS TRANSMITTER FOR COMMUNICATION PURPOSES [including the F.C.C. Provisions prompted by the Philco Remote-Control Device].—DeSoto. (*QST*, April 1942, Vol. 26, No. 4, pp. 28–33 and 66.) *See* also Goodman, 2571, above. For the Philco control *see* 509/511 & 1871 of 1939.

2573. COMMUNICATION BY MEANS OF EARTH CURRENTS [Correspondence on Results of Earlier Experimental Work].—(*QST*, April 1942, Vol. 26, No. 4, pp. 40–41 and 66.) *See* also May issue, pp. 41 and 96.

2574. THE FREQUENCY SPECTRUM [and the Present Confusion of Terminology].—Fleming-Williams. (*See* 2293.)

2575. ACTION OF THE COSMIC RAYS ON THE CONDUCTIVITY OF HEXANE.—Moulinier. (*Comptes Rendus* [Paris], 1st Dec. 1941, Vol. 213, No. 22, pp. 802–803.) For another recent intrusion of these rays *see* Berthelot, 1857 of June.

2576. LUMINOUS PHENOMENON ACCOMPANYING THE CYPRUS EARTHQUAKE, JANUARY 20TH, 1941.—Aziz. (*Nature*, 6th June 1942, Vol. 149, p. 640.)

2577. THE APPLICATION OF ELECTRICAL PROSPECTING TO THE DETERMINATION OF THE DIRECTION OF FISSURES IN ROCKS.—Bibikov. (*Journ. of Tech. Phys.* [in Russian], No. 13, Vol. 10, 1940, pp. 1143–1146.)

A method is proposed in which use is made of different values of electrical resistance when measured across and along the fissure. The current between two electrodes spaced 100 or 200 m apart is measured in different directions and a resistance ellipse is plotted. The major axis of the ellipse will be directed along the direction of the fissure.

2578. THE USE OF THE COLD-CATHODE CATHODE-RAY OSCILLOGRAPH FOR STRUCTURAL RESEARCH AND ABSOLUTE MEASUREMENTS, BY MEANS OF ELECTRON DIFFRACTION.—Induni. (*Schweizer Arch. f. angew. Wiss. u. Tech.*, Feb. 1942, Vol. 8, No. 2, pp. 35–45.)

In its ordinary applications as a "time microscope," the c.r. oscillograph with cold cathode has already reached the theoretical limits of its performance, but its field of usefulness has recently been extended by Scherrer's suggestion that it can be employed for electron-diffraction working. Examples of this use are discussed and illustrated, and it is shown how, by taking advantage of the accurate lattice-constant measurements now available, together with Siegbahn's new precise value for the electronic charge ($4.805 \times 10^{-10} \pm 0.004$ instead of 4.774×10^{-10} e.s.u.) it is possible to make absolute potential measurements of high precision. Thus with the combination of a c.r. oscillograph and a crystal lattice it is possible to construct the ideal absolute voltmeter: using the high-voltage gaseous-

discharge cathode embodied in the Trüb, Taüber & Company's models, only a few microamperes of current need be taken: the measuring range in the upper direction is unlimited (a relativistic correction can be introduced when necessary): no calibration is required, and there are no disturbing factors. It is proposed to employ one ray of the multiple-ray TTC oscillograph as a diffraction voltmeter, so that the cathode voltage will be continuously and directly indicated on a fluorescent scale.

2579. A SURVEY OF RESEARCH ACCOMPLISHMENTS WITH THE R.C.A. ELECTRON MICROSCOPE [in Biology, Metallurgy, & Chemistry: with Photographs].—Morton. (*R.C.A. Review*, Oct. 1941, Vol. 6, No. 2, pp. 131–166.)

2580. ON THE SUITABILITY OF BERYLLIUM FOR THE PREPARATION OF SURFACE-IMPRESSION FOILS FOR THE ELECTRON MICROSCOPE.—Rüdiger. (*See* 2471.)

2581. MASS SPECTROMETER FOR GAS ANALYSIS [for Refineries, etc.].—Westinghouse. (*Journ. Applied Phys.*, April 1942, Vol. 13, No. 4, p. 274.)

2582. A HIGH-FREQUENCY "METAL SEEKER" FOR SURGERY [Mains-Driven Instrument weighing 11 kg (including Built-in Loudspeaker): Heterodyne-Note Change of 35 c/s produced by Rifle Bullet at 6 cm from Probe: Literature References to Reports from Surgeons, etc.].—(*E.T.Z.*, 23rd April 1942, Vol. 63, No.15/16, p. 196.) *Cf.* 1584 of May and back reference.

2583. "RADIOLOGIC PHYSICS" [including Chapters on Electronics & Electro-Medical Apparatus: Book Review].—Weyl & others. (*Review Scient. Instr.*, April 1942, Vol. 13, No. 4, pp. 168–169.)

2584. DETECTION OF RADON BY MEANS OF A PROPORTIONAL COUNTER [Quantities of Order of 10^{-12} Curie: Two Methods].—Brown & others. (*Review Scient. Instr.*, April 1942, Vol. 13, No. 4, pp. 147–151.)

2585. THE GEIGER-MÜLLER TUBE: AN ELECTRONIC INSTRUMENT [has Now reached Stage of Systematic & Routine Manufacture: Steadily Increasing Number of Industrial Applications].—Weisz. (*Electronics*, Dec. 1941, Vol. 14, No. 12, pp. 18–21.)

2586. APPLICATION OF THE GEIGER-MÜLLER COUNTER IN GAMMA-RAY DEFECTOSCOPY.—Shaikevich. (*Journ. of Tech. Phys.* [in Russian], No. 12, Vol. 10, 1940, pp. 1038–1040.) *Cf.*, for example, Trost, 591 of February.

2587. A PULSE DEMULTIPLIER [for Geiger-Müller Counters: Search for Simple & Satisfactory Arrangement for Frequencies up to 100 c/s: Two-Valve/Thyratron Combination, with a "Pulse Normaliser" converting Pulses of Different Intensities, Form, & Length into Equal, Very Short Pulses].—Franzini & Della Corte. (*La Ricerca Scient.*, Dec. 1941, Vol. 12, No. 12, pp. 1244–1250.)

2588. A ONE-TUBE QUENCHING-RECORDING CIRCUIT FOR G-M COUNTERS [using a 117L7GT Valve (Half-Wave Rectifier & Beam-Power Tetrode)].—Coven. (*Review Scient. Instr.*, April 1942, Vol. 13, No. 4, pp. 188–189.)

2589. THE JUNGINGER VISIBILITY RECORDER: THE DEVELOPMENT OF APPARATUS FOR THE OBJECTIVE MEASUREMENT OF ATMOSPHERIC TRANSMISSION [continuously, by Day & Night: Completely Automatic Equipment with Drum Recording, for 100 m Distance: All Components, except Triple Mirror, in One Instrument: Single Photocell only].—Schönwald & Müller. (*Zeitschr. f. tech. Phys.*, No. 2, Vol. 23, 1942, pp. 30–38.)

2590. ON THE PERFORMANCE OF OPTICAL INSTRUMENTS WITH COATED LENS SYSTEMS, *and* A NEW CHEMICAL METHOD OF REDUCING THE REFLECTANCE OF GLASS.—Tyler & others: Nicoll. (*See* 2414 & 2415.)

2591. SENSITIVE DIRECT-CURRENT AMPLIFIER WITH A.C. OPERATION [particularly for Strain-Measurements, Action Currents, etc.].—Miller. (*See* 2314.)

2592. RECEIVER CONTROL BY TRANSMITTED SIGNAL —"ALERT" RECEIVER.—Deal. (*See* 2352.)

2593. THE GENERATION AND DISTRIBUTION OF A STANDARD 1 kc/s SYNCHRONISING SIGNAL [for Carrier-Telephony Systems].—Booth & Gregory. (*P.O. Elec. Eng. Journ.*, Jan. 1942, Vol. 34, Part 4, pp. 156–160.)

2594. CARRIER SYSTEM No. 7 [Latest Type of 12-Circuit System].—Taylor. (*P.O. Elec. Eng. Journ.*, Oct. 1941 & Jan. 1942, Vol. 34, Parts 3 & 4, pp. 101–108 & 161–168.)

2595. MAGNETIC CHUCKS [Defects of Electro-Magnetic Type: the Magnetic Chuck using Alnico, with Flux Control Device].—(*Sci. & Culture* [Calcutta], May 1941, Vol. 6, No. 11, p. 654.)

2596. ELECTRONIC PYROMETER CONTROL [of Industrial Furnaces: Objections to Usual Mechanical-Electrical Methods: Circuit in which Aluminium Vane on Pointer causes Oscillations: Four Years' Operation without Serious Loss of Emission: Many Other Applications, replacing Photocell or Variable-Capacitance Systems].—MacLaren. (*Electronics*, Nov. 1941, Vol. 14, No. 11, pp. 50 and 78.)

2597. MEASURING SMALL RELATIVE MOTIONS IN CENTRAL-OFFICE SWITCHES [Mechanical Vibrometers employing Arbor (carrying Mirror) rolling between Two Flat Surfaces].—Gorton. (*Bell Lab. Record*, March 1942, Vol. 20, No. 7, pp. 170–174.)

2598. AN INEXPENSIVE SENSITIVE RELAY [primarily for Wireless Control of Model Aircraft, etc.].—Worthington. (*Electronic Eng:g*, Nov. 1941, Vol. 14, No. 165, p. 504.)